Product Catalog

Air-Cooled Scroll Chillers
Model CGAM — Made in USA
20 to 130 Nominal Tons (60 Hz and 50 Hz)

February 2017

CG-PRC017M-EN

Introduction

Design and manufacturing excellence makes Trane a leader in the air-cooled chiller market place. This tradition of using excellence to meet market demands is illustrated with the Trane 20 to 130 ton air-cooled scroll chiller. This next-generation chiller is an exciting step forward in energy-efficiency, sound, reliability, ease of serviceability, control precision, application versatility, and operational cost-effectiveness. The chiller is designed to deliver proven Trane performance based on the redesign of a European model that has been a market leader, plus all the benefits of new heat transfer and fan designs, as well as, low-speed, direct-drive scroll compressors.

Important Design Features and New Features

- Higher full-load and part-load energy efficiency that exceed ASHRAE 90.1 and reduce operating costs
- Significantly lower noise levels than other scroll compressor chillers.
- R-410A optimized design.
- Flow switch and water strainer are factory installed in the optimum locations for seamless operation and reduced chiller installation and maintenance time.
- Tracer® CH530 with Adaptive Control™ has improved fan algorithms for more reliable operation at extreme conditions.
- Single chiller time of day scheduling communication for easier control of small jobs.
- Easily integrated with existing BAS via BACnet® or LonTalk® communication interface.
- All major service components are close to the unit edge for safe and easy maintenance.
- The chiller is designed for easy serviceability with input from our extensive experience in design, testing and field operation.

Copyright

This document and the information in it are the property of Trane, and may not be used or reproduced in whole or in part without written permission. Trane reserves the right to revise this publication at any time, and to make changes to its content without obligation to notify any person of such revision or change.

Trademarks

All trademarks referenced in this document are the trademarks of their respective owners.

Revision History

Added AHRI information to Mechanical Specifications chapter.

Table of Contents

Introduction 2
Features and Benefits 4
Application Considerations 6
Model Number Descriptions 13
General Data 15
Controls 25
Electrical 29
Electrical Connections 36
Dimensions 40
Weights 53
Mechanical Specifications 60

Features and Benefits

Reliability

- Years of laboratory testing, including running the chiller at extreme operating conditions, have resulted in optimized compressor and chiller systems reliability by confirming a robust design and verifying quality each step of the way.
- Direct-drive, low-speed scroll compressors with fewer moving parts provide maximum efficiency, high reliability, and low maintenance requirements. Suction gas-cooled motor stays at a uniformly low temperature for long motor life.
- The third generation microprocessor control system provides improved control capabilities with Adaptive Control™ to keep the unit operating even in adverse conditions. Advanced microelectronics protect both the compressor and the motor from typical electrical fault conditions like thermal overload and phase rotation.
- Standard factory-installed water strainer helps prevent system debris from affecting unit flow or heat transfer.
- Flow switch is factory-installed at the optimum location in the piping for reduced chiller installation cost and superior flow sensing, reducing the potential for nuisance trips.
- Microchannel condenser uses all-aluminum coils with fully-brazed construction. This design reduces risk of leaks. Their flat streamlined tubes with small ports and metallurgical tube-to-fin bond enable exceptional heat transfer and dramatic reduction in refrigerant use.
- The optional round tube and plate fin condenser with its exceptionally rigid coil structure is manufactured with hairpin tubes which reduces the number of braze joints by half, significantly reducing the potential for leaks.
- Innovative condenser pressure integrated fan control algorithms and variable frequency drive on circuits' lead fans provides more reliable operation at extreme temperature conditions.

Life Cycle Cost-Effectiveness

- Industry leading full- and part-load efficiencies
- Electronic expansion valve and high speed suction temperature sensor enables tight chilled water temperature control and low superheat, resulting in more efficient full-load and part-load operation than previously available.
- Partial heat recovery available to save energy on pre-heat or reheat applications.
- Optional pump package features variable speed drive on the pump motors, eliminating the need for energy sapping chilled water system triple-duty or balancing valves. Additionally, system commissioning and flexibility is greatly enhanced. Chilled water supply reliability is increased with the dual pump design, due to standard failure/recovery functionality.

Application Versatility

- Industrial/low temperature process cooling - Excellent operating temperature range and precise control capabilities enable tight control.
- Ice/thermal storage - Utilities and owners benefit from reduced cooling energy cost. The chiller's dual setpoint control and industry leading energy storage efficiency assures reliable operation and superior system efficiency. Trane's partnership with CALMAC brings a proven track record of successful installations across many markets; from churches and schools to sky scrapers and office buildings.
- Partial heat recovery - An optional factory-installed heat exchanger provides hot water for many needs; water preheat and reheat for enhanced system humidity control are just two. This option reduces operating costs associated with boilers/domestic hot water.

Simple, Economical Installation

- Reduced sound levels, compared to other scroll compressor chillers, perfect for applying outdoor HVAC equipment in neighborhoods, such as K-12 schools.
- System integration available with LonTalk® or BACnet® through a single twisted-pair wire for a less expensive translation to an existing building automation system.
- Powder-coated paint provides superior durability, corrosion protection, and is less likely to be damaged while rigging/lifting/installing the chiller.
- Factory commissioned unit-mounted starter reduces overall job cost and improves system reliability by eliminating job site design, installation and labor coordination requirements.

Precision Control

- Easily integrated with existing BAS via BACnet® or LonTalk® communication interfaces.
- Microprocessor-based Tracer® CH530 controls monitor and maintain optimal operation of the chiller and its associated sensors, actuators, relays, and switches, all of which are factory-installed and tested prior to shipping.
- Adaptive Control maintains chiller operation under adverse conditions, when many other chillers might simply shut down. The chiller control is able to compensate for conditions such as high condensing pressure and low suction pressure.
- Advanced microprocessor controls enable variable primary flow applications providing chilled water temperature control accuracy of ±2°F (1.1°C) with flow changes up to 10 percent per minute, while keeping the chiller online through flow changes up to 30 percent per minute.
- Easy-to-use operator interface displays all operating and safety messages, with complete diagnostics information, on a highly readable panel with a scrolling touch-screen display. Status and diagnostic messages are in plain language - no codes to interpret - and are available in 20 languages.

Improved Serviceability

- All major serviceable components are close to the edge. Service shutoff valves and water strainer are conveniently located to enable easy service.
- Water piping connections are factory piped to the edge of the unit to make installation safer and faster.
- Electronic expansion valve designed so controls can be removed and serviced without refrigerant handling.
- The optional pump package is designed to be serviced in place. The unit structure includes a rigging point for pump servicing, making inspection, cleaning and pump seal changes easier.
- High pressure transducer and temperature sensors mountings enable troubleshooting and replacement without removing refrigerant charge, greatly improving serviceability over the life of the unit.
- Dead front panel construction provides for enhanced service technician safety.

Application Considerations

Certain application constraints should be considered when sizing, selecting and installing Trane CGAM chillers. Unit and system reliability is often dependent upon proper and complete compliance with these considerations. Where the application varies from the guidelines presented, it should be reviewed with your local Trane account manager.

Note: *The terms water and solution are used interchangeably in the following paragraphs.*

Unit Sizing

See TOPSS™ performance selection software for unit capacities. Intentionally over-sizing a unit to assure adequate capacity is not recommended. Erratic system operation and excessive compressor cycling are often a direct result of an oversized chiller. In addition, an oversized unit is usually more expensive to purchase, install, and operate. If oversizing is desired consider using two smaller units.

Water Treatment

The use of untreated or improperly treated water in chillers may result in scaling, erosion, corrosion, and algae or slime buildup. This will adversely affect heat transfer between the water and system components. Proper water treatment must be determined locally and depends on the type of system and local water characteristics.

Neither salt nor brackish water is recommend for use in Trane air-cooled CGAM chillers. Use of either will lead to a shortened life. Trane encourages employing a qualified water treatment specialist, familiar with local water conditions, to assist in establishing a proper water treatment program.

Foreign matter in the chilled water system can also increase pressure drop and, consequently, reduce water flow. For this reason it is important to thoroughly flush all water piping to the unit before making the final piping connections to the unit.

Effect of Altitude on Capacity

At elevations substantially above sea level, the decreased air density will decrease condenser capacity and, therefore, unit capacity and efficiency. S

Ambient Limitations

Trane chillers are designed for year-round operation over a range of ambient temperatures. The air-cooled model CGAM chiller will operate in ambient temperatures of 32 to 125°F (0 to 52°C) for high ambient or 0 to 125°F (-18 to 52°C) for wide ambient. Extreme low ambient operation is offered down to -20°F (-28.9°C). Operation below 32°F requires the use of variable speed fans unless otherwise specified.

The minimum ambient temperatures are based on still conditions (winds not exceeding five mph). Greater wind velocities will result in a drop in head pressure, therefore increasing the minimum starting and operating ambient temperature. The Adaptive Control™ microprocessor will attempt to keep the chiller on-line when high or low ambient conditions exist, making every effort to avoid nuisance trip-outs and provide the maximum allowable tonnage.

Water Flow Limits

The minimum water flow rates are given in the General Data section of this catalog. Evaporator flow rates below the tabulated values will result in laminar flow causing freeze-up problems, scaling, stratification and poor control. The maximum evaporator water flow rate is also given. Flow rates exceeding those listed may result in very high pressure drop across the evaporator.

Flow Rates Out of Range

Many process cooling jobs require flow rates outside of the published minimum and maximum flow rates for the CGAM evaporator. A simple piping change can alleviate this problem. For example: a plastic injection molding process requires 80 gpm (5.0 l/s) of 50°F (10°C) water and returns that water at 60°F (15.6°C). The selected chiller can operate at these temperatures, but has a minimum flow rate of 106 gpm (6.6 l/s). The system layout in Figure 1 can satisfy the process.

Figure 1. Flow rate out of range systems solution

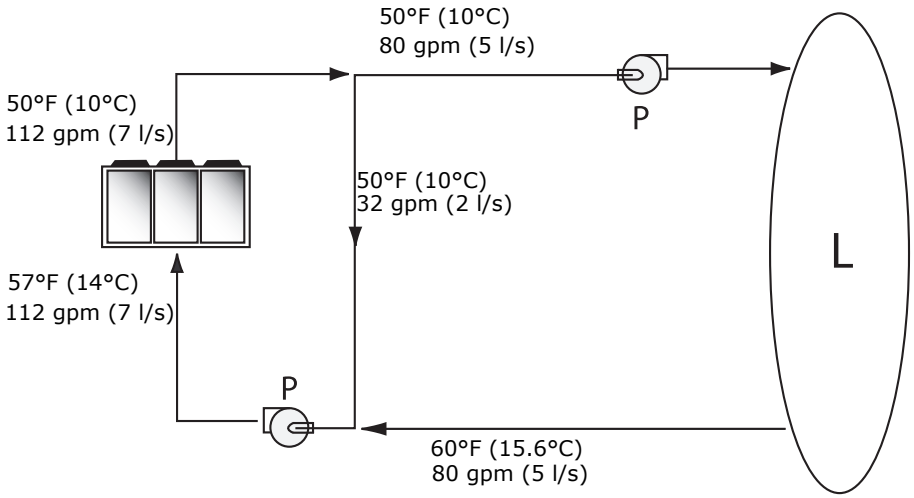

Flow Proving

Trane provides a factory-installed water flow switch monitored by CH530 which protects the chiller from operating in loss of flow conditions.

Variable Flow in the Evaporator

Variable Primary Flow (VPF) systems present building owners with several cost-saving benefits when compared with Primary/Secondary chilled water systems. The most obvious cost savings results from eliminating the constant volume chiller pump(s), which in turn eliminates the related expenses of the associated piping connections (material, labor), and electrical service and switch gear. In addition to the installed cost advantage, building owners often cite pump related energy savings as the reasons that prompted them to select a VPF system.

The CGAM is capable of handling variable evaporator flow without losing control of the leaving water temperature. The microprocessor and capacity control algorithms are designed to handle a 10 percent change in water flow rate per minute while maintaining a ±2°F (1.1°C) leaving water temperature control accuracy. The chiller tolerates up to 30 percent per minute water flow variation as long as the flow is equal or above the minimum flow rate requirement.

With the help of a software analysis tool such as System Analyzer™, DOE-2 or TRACE™, you can determine whether the anticipated energy savings justify the use of variable primary flow in a particular application. Existing constant flow chilled water systems may be relatively easily converted to VPF and benefit greatly from the inherent efficiency advantages.

Water Temperature

Leaving Water Temperature Limits

Trane CGAM chillers have three distinct leaving water temperature categories:

- standard, with a leaving solution range of 42 to 65°F (5.5 to 18°C)
- low temperature process cooling, with leaving solution range of 10 to 65°F (-12 to 18°C)
- ice-making, with leaving solution range of 20 to 65°F (-7 to 18°C)
- low leaving temperature, with leaving solution below 10°F (-12.2°C)

Since a leaving solution temperature below 42°F (5.5°C) results in a suction temperature at or below the freezing point of water, a glycol solution is required for all low temperature and ice-making machines. Ice making control includes dual setpoint controls and safeties for ice making and standard cooling capabilities. Consult your local Trane account manager for applications or selections involving low temperature or ice making machines.

The maximum water temperature that can be circulated through the CGAM evaporator when the unit is not operating is 125°F (51.7°C). Evaporator damage may result above this temperature.

Leaving Water Temperature Out of Range

Similar to the flow rate limitations above, many process cooling jobs require temperature ranges that are outside the allowable minimum and maximum operating values for the chiller. Figure 2 below shows a simple example of a mixed water piping arrangement change that can enable reliable chiller operation while meeting such cooling conditions. For example, a laboratory load requires 238 gpm (5 l/s) of water entering the process at 86°F (30°C) and returning at 95°F (35°C). The chiller's maximum leaving chilled water temperature of 65°F (15.6°C) prevents direct supply to the load. In the example shown, both the chiller and process flow rates are equal, however, this is not necessary. For example, if the chiller had a higher flow rate, there would simply be more water bypassing and mixing with warm water returning to the chiller.

Figure 2. Temperature out of range system solution

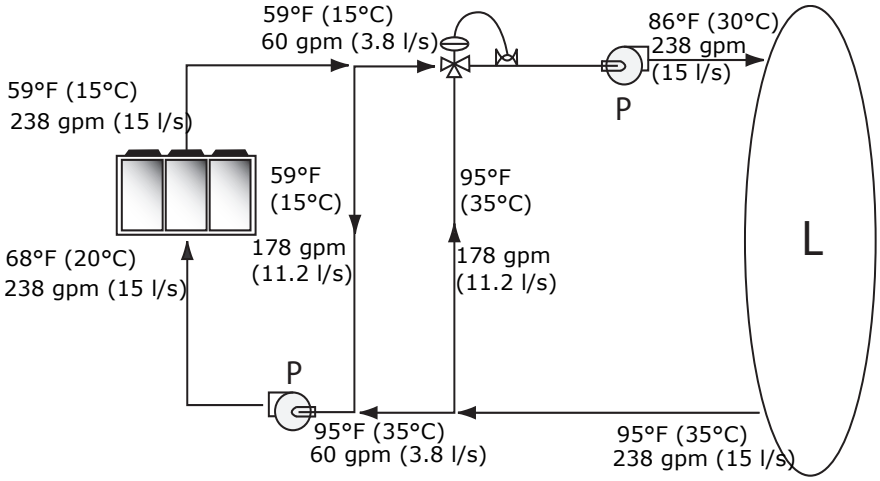

Supply Water Temperature Drop

The cataloged performance data for the Trane CGAM chiller is based on a chilled water temperature drop of 10°F (6°C) for I-P data and 9°F (5°C) for SI data. Full load chilled water temperature drops from 6 to 18°F (3.3 to 10°C) may be used as long as minimum and maximum water temperature and minimum and maximum flow rates are not exceeded. Temperature drops outside this range

at full load conditions are beyond the optimum range for control and may adversely affect the microcomputer's ability to maintain an acceptable supply water temperature range. Furthermore, full load temperature drops of less than 6°F (3.3°C) may result in inadequate refrigerant superheat which is critical to long term efficient and reliable operation. Sufficient superheat is always a primary concern in any refrigerant system and is especially important in a packaged chiller where the evaporator is closely coupled to the compressor.

Typical Water Piping

All building water piping must be flushed prior to making final connections to the chiller. To reduce heat loss and prevent condensation, insulation should be applied. Expansion tanks are also usually required so that chilled water volume changes can be accommodated.

Avoidance of Short Water Loops

Adequate water volume is an important system design parameter because it provides for stable chilled water temperature control and helps limit unacceptable short cycling of chiller compressors.

The chiller's temperature control sensor is located in the supply (outlet) water connection or pipe. This location allows the building to act as a buffer to slow the rate of change of the system water temperature. If there is not sufficient water volume in the system to provide an adequate buffer, temperature control can suffer, resulting in erratic system operation and excessive compressor cycling.

Typically, a two-minute water loop circulation time is sufficient to prevent short water loop issues. Therefore, as a guideline, ensure the volume of water in the chilled water loop is greater than or equal to two times the evaporator flow rate. For systems with a rapidly changing load profile the volume should be increased.

If the installed system volume does not meet the above recommendations, the following items should be given careful consideration to increase the volume of water in the system and, therefore, reduce the rate of change of the return water temperature.

- A volume buffer tank located in the return water piping.
- Larger system supply and return header piping (which also reduces system pressure drop and pump energy use).

Minimum water volume for a process application

If a chiller is attached to an on/off load such as a process load, it may be difficult for the controller to respond quickly enough to the very rapid change in return solution temperature if the system has only the minimum water volume recommended. Such systems may cause chiller low temperature safety trips or in the extreme case evaporator freezing. In this case, it may be necessary to add or increase the size of the mixing tank in the return line.

Multiple Unit Operation

Whenever two or more units are used on one chilled water loop, Trane recommends that their operation be coordinated with a higher level system controller for best system efficiency and reliability. The Trane Tracer system has advanced chilled plant control capabilities designed to provide such operation.

Ice Storage Operation

An ice storage system uses the chiller to make ice at night when utility rates are lower. The stored ice reduces or even replaces mechanical cooling during the day when utility rates are at their highest. This reduced need for cooling results in significant utility cost savings and source energy savings.

Another advantage of an ice storage system is its ability to eliminate chiller oversizing. A "rightsized" chiller plant with ice storage operates more efficiently with smaller support equipment while lowering the connected load and reducing operating costs. Best of all, this system still provides a capacity safety factor and redundancy by building it into the ice storage capacity for practically no cost compared to oversized systems.

Trane air-cooled chillers are uniquely suited to low temperature applications like ice storage because of the ambient relief experienced at night. Chiller ice making efficiencies are typically similar to or even better than standard cooling daytime efficiencies as a result of nighttime dry-bulb ambient relief.

Standard smart control strategies for ice storage systems are another advantage of the CGAM chiller. The dual mode control functionality is integrated right into the chiller. Trane Tracer building management systems can measure demand and receive pricing signals from the utility and decide when to use the stored cooling and when to use the chiller.

Partial Heat Recovery Operation

Partial heat recovery is designed to capture a portion of the heat that is normally rejected to the atmosphere and put it to beneficial use. With the addition of a heat recovery cycle, heat removed from the building cooling load can be transferred to a preheat application. Keep in mind that the heat recovery cycle is only possible if a cooling load exists to act as a heat source.

To provide a heat recovery cycle, a supplemental heat exchanger is mounted in series to the air-cooled condenser. The supplemental heat exchanger is piped into a preheat circuit. During the heat recovery cycle, the unit operates just as it does in the cooling-only mode except that a portion of the cooling load heat is rejected to the water heating circuit rather than to the air through the air-cooled condenser. Water circulated through the heat recovery heat exchanger by the pumps absorbs cooling load heat from the compressed refrigerant gas discharged by the compressors. The heated water is then used to satisfy heating requirements.

Partial heat recovery can be used in applications where hot water is needed for use in kitchens, lavatories, etc. It is comparatively smaller in size and its heating capacity is not controlled. The partial heat recovery heat exchanger cannot operate alone without a load on the chiller.

The partial heat recovery heat exchanger can get up to 157°F (69.4°C) leaving temperature. For more information see TOPSS™ performance selection program.

Unit Placement

Setting The Unit

A base or foundation is not required if the selected location is level and strong enough to support the unit's operating weight (see "Weights" section of this catalog).

For a detailed discussion of base and foundation construction, refer to the sound engineering bulletin or the unit IOM. Manuals are available through the local Trane office.

HVAC equipment must be located to minimize sound and vibration transmission to the occupied spaces of the building structure it serves. If the equipment must be located in close proximity to a building, it should be placed next to an unoccupied space such as a storage room, mechanical room, etc. It is not recommended to locate the equipment near occupied, sound sensitive areas of the building or near windows. Locating the equipment away from structures will also prevent sound reflection, which can increase sound levels at property lines or other sensitive points.

Isolation and Sound Emission

Structurally transmitted sound can be reduced by elastomeric vibration eliminators. Elastomeric isolators are generally effective in reducing vibratory noise generated by compressors, and therefore, are recommended for sound sensitive installations. An acoustical engineer should always be consulted on critical applications.

Figure 3. Installation example

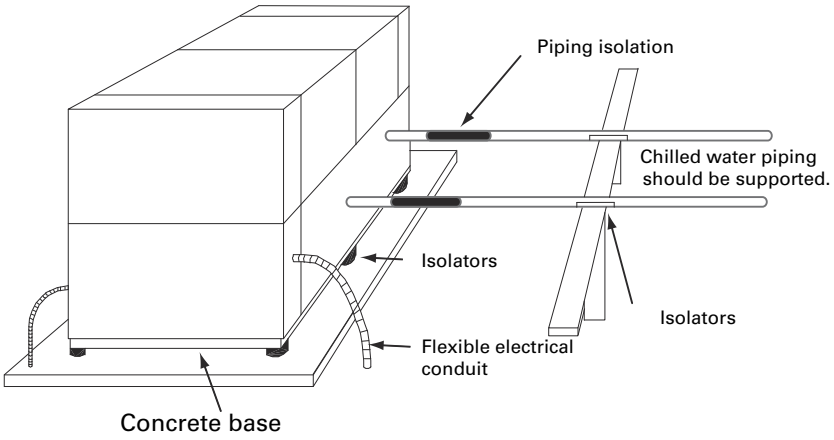

For maximum isolation effect, water lines and electrical conduit should also be isolated. Wall sleeves and rubber isolated piping hangers can be used to reduce the sound transmitted through water piping. To reduce the sound transmitted through electrical conduit, use flexible electrical conduit.

Local codes on sound emissions should always be considered. Since the environment in which a sound source is located affects sound pressure, unit placement must be carefully evaluated. Sound power levels for chillers are available on request.

Servicing

Adequate clearance for evaporator and compressor servicing should be provided. Recommended minimum space envelopes for servicing are located in the dimensional data section and can serve as a guideline for providing adequate clearance. The minimum space envelopes also allow for control panel door swing and routine maintenance requirements. Local code requirements may take precedence.

Unit Location

General

Unobstructed flow of condenser air is essential to maintain chiller capacity and operating efficiency. When determining unit placement, careful consideration must be given to assure a sufficient flow of air across the condenser heat transfer surface. Two detrimental conditions are possible and must be avoided: warm air recirculation and coil starvation. Air recirculation occurs when discharge air from the condenser fans is recycled back to the condenser coil inlet. Coil starvation occurs when free airflow to the condenser is restricted.

Condenser coils and fan discharge must be kept free of snow or other obstructions to permit adequate airflow for satisfactory unit operation. Debris, trash, supplies, etc., should not be allowed to accumulate in the vicinity of the air-cooled chiller. Supply air movement may draw debris into the condenser coil, blocking spaces between coil fins and causing coil starvation.

Both warm air recirculation and coil starvation cause reductions in unit efficiency and capacity because of the higher head pressures associated with them. The air-cooled CGAM chiller offers an advantage over competitive equipment in these situations. Operation is minimally affected in many restricted air flow situations due to its advanced Adaptive Control™ microprocessor which has the ability to understand the operating environment of the chiller and adapt to it by first optimizing its performance and then staying on line through abnormal conditions. For example, high ambient temperatures combined with a restricted air flow situation will generally not cause the air-cooled model CGAM chiller to shut down. Other chillers would typically shut down on a high pressure nuisance cut-out in these conditions.

Cross winds, those perpendicular to the condenser, tend to aid efficient operation in warmer ambient conditions. However, they tend to be detrimental to operation in lower ambients due to the accompanying loss of adequate head pressure. Special consideration should be given to low ambient units. As a result, it is advisable to protect air-cooled chillers from continuous direct winds exceeding 10 mph (4.5 m/s) in low ambient conditions.

The recommended lateral clearances are depicted in the close spacing engineering bulletin available from your local office.

Provide Sufficient Unit-to-Unit Clearance

Units should be separated from each other by sufficient distance to prevent warm air recirculation or coil starvation. Doubling the recommended single unit air-cooled chiller clearances will generally prove to be adequate.

Walled Enclosure Installations

When the unit is placed in an enclosure or small depression, the top of the surrounding walls should be no higher than the top of the fans. The chiller should be completely open above the fan deck. There should be no roof or structure covering the top of the chiller. Ducting individual fans is not recommended.

Model Number Descriptions

Digits 1-4— Chiller Model

CGAM= Air-Cooled Scroll Packaged Chiller

Digits 5-7— Unit Nominal Ton

020 = 20 Tons
026 = 26 Tons
030 = 30 Tons
035 = 35 Tons
040 = 40 Tons
052 = 52 Tons
060 = 60 Tons
070 = 70 Tons
080 = 80 Tons
090 = 90 Tons
100 = 100 Tons
110 = 110 Tons
120 = 120 Tons
130 = 130 Tons

Digit 8— Unit Voltage

A = 208 Volt 60 Hz 3 Phase
B = 230 Volt 60 Hz 3 Phase
D = 380 Volt 60 Hz 3 Phase
E = 400 Volt 50 Hz 3 Phase
F = 460 Volt 60 Hz 3 Phase
G = 575 Volt 60 Hz 3 Phase

Digit 9— Manufacturing Plant

2 = Pueblo, USA

Digits 10-11— Design Sequence

** = Factory/ABU Assigned

Digit 12— Unit Type

2 = High Efficiency
3 = Extra Efficiency

Digit 13— Agency Listing

X = No Agency Listing
A = UL Listed to U.S. and Canadian Safety Standard

Digit 14— Pressure Vessel Code

X = No Pressure Vessel Code

Digit 15— Unit Application

B = High Ambient (32-125°F/0-52°C)
D = Wide Ambient (0-125°F/-18-52°C)
J = Extreme Low Ambient — down to -20°F (-28.9°C)

Digit 16— Refrigerant Isolation Valves

2 = Refrigerant Isolation Valves (Discharge Valve)

Digit 17— Structural Options

A = Standard Unit Structure
B = Seismic to International Building Code (IBC)
C = California Office of Statewide Health Planning and Development (OSHPD) Certification
D = Wind Load for Florida Hurricane

Digit 18— Freeze Protection (Factor-Installed Only)

X = Without Freeze Protection
1 = With Freeze Protection (External T-Stat Control)

Digit 19— Insulation

A = Factory Insulation - All Cold Parts
B = Insulation for High Humidity/ Low Evap Temp

Digit 20— Factory Charge

1 = Full Factory Refrigerant Charge (R-410A)
2 = Nitrogen Charge

Digit 21— Evaporator Application

A = Standard Cooling (42 to 65°F/5.5 to 18°C)
B = Low Temperature Process (10 to 42°F/-12.2 to 5.5°C)
C = Ice-Making - Hardwired Interface (20 to 65°F/-7 to 18°C)
D = Low Leaving Water (below 10°F/-12.2°C)

Digit 22— Water Connections

1 = Grooved Pipe Connection

Digit 23— Condenser Fin Material

A = Lanced Aluminum Fins
C = Non-Lanced Copper Fins
D = Lanced Aluminum Fins w/ CompleteCoat™
H = Microchannel Coils
J = Microchannel Coils w/ CompleteCoat

Digit 24— Condenser Heat Recovery

X = No Heat Recovery
1 = Partial Heat Recovery with Fan Control

Digit 25— Not Used

X

Digit 26— Starter Type

A = Across the Line Starter/ Direct on Line

Digit 27— Incoming Power Line Connection

1 = Single Point Power Connection

Digit 28— Power Line Connection Type

A = Terminal Block
C = Circuit Breaker
D = Circuit Breaker with High Fault Rated Control Panel

Digit 29— Enclosure Type

1 = Water Tight (per UL 1995 Standard)

Digit 30— Unit Operator Interface

A = Dyna-View/English

Digit 31— Remote Interface (Digital Comm)

X = No Remote Digital Communication
2 = LonTalk®/Tracer® Summit Interface
3 = Time of Day Scheduling
4 = BACNet® Interface

Digit 32— External Chilled/Hot Water and Current Demand Limit Setpoint

X = No External Chilled Water Setpoint
A = External Chilled Water and Demand Limit Setpoint 4-20mA
B = External Chilled Water and Demand Limit Setpoint 2-10Vdc

Digit 33— Percent Capacity

X = Without % Capacity
1 = With % Capacity

Digit 34— Programmable Relays

X = No Programmable Relays
A = Programmable Relays

Digit 35— Pump Type

X = No Pumps and No Contactors
8 = Dual High Head Pump

Digit 36— Pump Flow Control

X = No Pump Control
B = Pump Flow Controlled by Variable Speed Drive

Digit 37 — Buffer Tank

X

Digit 38— Short Circuit Rating

X = No Short Circuit Rating
A = Default A Short Circuit Rating
B = High A Short Circuit Rating

Digit 39— Installation Accessories

X = No Installation Accessories
1 = Elastomeric Isolators
3 = Seismically Rated Isolators
5 = Elastomeric Pads

Digit 40— Water Strainer

A = With Water Strainer Factory Installed

Digit 41— Sound Attenuator Package

3 = Super Quiet
5 = Comprehensive Acoustic Package

Digit 42— Appearance Options

X = No Appearance Options
A = Architectural Louvered Panels
B = Half Louvers

Digit 43— Exterior Finish

1 = Standard Paint

Digit 44— Label, Literature Language

B = Spanish and English
D = English
E = French and English

Digit 45— Phase Reversal Protection

1 = Phase Reversal Protection

Digit 46— Shipping Package

X = No Skid (Standard)
A = Unit Containerization Package

Digit 47— Performance Test Options

X = No Performance Test
2 = Test with Report
3 = Witness Test with Report

Digit 48— Flow Switch Set Point

C = Flow Switch Set Point 15
F = Flow Switch Set Point 35
H = Flow Switch Set Point 45
L = Flow Switch Set Point 60

Digit 49— Not Used

X

Digit 50— Specials

X = None
S = Special

Note: *If a digit is not defined it may be held for future use.*

General Data

Table 1. General data - 60 Hz - high efficiency - IP

Size		20	26	30	35	40	52	60	70	80	90	100	110	120	130
Compressor															
Number	#	2	2	2	2	4	4	4	4	4	4	4	4	4	6
Tonnage/ckt[a]		10+10	13+13	15+15	15+20	10+10	13+13	15+15	15+20	20+20	20+25	25+25	25+30	30+30	20+20 +25
Evaporator															
Water storage	(gal)	1.4	2.2	2.2	3.2	2.4	4.1	5.0	7.5	7.0	9.0	10.3	11.5	11.5	12.3
Min. flow	(gpm)	30	38	42	50	57	74	84	100	115	129	145	157	170	184
Max. flow	(gpm)	69	89	100	117	136	176	201	238	275	307	346	375	407	440
Water connection	(in)	2	2.5	2.5	2.5	3	3	3	3	4	4	4	4	4	4
Condenser															
Round Tube and Plate Fin Coils															
Quantity of coils	#	1	1	1	1	2	2	2	2	4	4	4	4	4	4
Coil length	(in)	91	91	127	127	91	91	127	127	121	121	144	144	144	180
Coil height	(in)	68	68	68	68	68	68	68	68	42	42	42	42	42	42
Number of rows	#	2	2	2	2	2	2	2	2	3	3	3	3	3	3
Fins per foot	(fpf)	192	192	192	192	192	192	192	192	192	192	192	192	192	192
Microchannel Coils															
Quantity of coils	#	1	1	1	1	2	2	2	2	8	8	8	8	8	8
Coil length	(in)	91	91	127	127	91	91	127	127	68+46	68+46	68+68	68+68	68+68	68+ 104
Coil height[b]	(in)	42+10	42+10	42+10	42+10	42+10	42+10	42+10	42+10	34+7	34+7	34+7	34+7	34+7	34+7
Tube width	(in)	1	1	1	1	1	1	1	1	1	1	1	1	1	1
Fan															
Quantity	#	2	2	3	3	4	4	6	6	6	6	8	8	8	10
Diameter	(in)	28.8	28.8	28.8	28.8	28.8	28.8	28.8	28.8	28.8	28.8	28.8	28.8	28.8	28.8
Airflow per fan	(cfm)	9413	9420	9168	9173	9413	9420	9168	9173	9470	9472	9094	9096	9098	9094
Power per motor	(HP)	1.3	1.3	1.3	1.3	1.3	1.3	1.3	1.3	1.3	1.3	1.3	1.3	1.3	1.3
Motor RPM	(rpm)	840	840	840	840	840	840	840	840	840	840	840	840	840	840
Tip speed	(ft/min)	6333	6333	6333	6333	6333	6333	6333	6333	6333	6333	6333	6333	6333	6333
General Unit															
Refrig circuits	#	1	1	1	1	2	2	2	2	2	2	2	2	2	2
Capacity steps	%	50-100	50-100	50-100	43-100	25-50-75-100	25-50-75-100	25-50-75-100	21-43-71-100	25-50-75-100	22-44-72-100	25-50-75-100	23-45-73-100	25-50-75-100	15-31-46-62-81-100
Min ambient - wide	(°F)	0	0	0	0	0	0	0	0	0	0	0	0	0	0
Min ambient - high	(°F)	32	32	32	32	32	32	32	32	32	32	32	32	32	32
Min ambient - extreme low	(°F)	-20	-20	-20	-20	-20	-20	-20	-20	-20	-20	-20	-20	-20	-20
Round Tube and Plate Fin Coils															
Refrig charge/ckt[a]	(lbs)	32	34	44	48	32	32	44	48	74	78	90	86	86	112
Oil charge/ckt[a]	(gal)	1.7	1.7	1.9	3.5	1.7	1.7	1.9	3.5	3.5	3.5	3.5	3.7	3.8	5.8
Microchannel Coils															
Refrig charge/ckt [a]	(lbs)	19	22.5	28	35	19	20.5	28	35.5	45	47	49	46	50	66
Oil charge/ckt[a]	(gal)	1.4	1.4	1.6	2.9	1.4	1.4	1.6	2.9	2.9	2.9	2.9	3.0	3.1	5.4

Table 1. General data - 60 Hz - high efficiency - IP (continued)

Size		20	26	30	35	40	52	60	70	80	90	100	110	120	130
Pump Package															
Avail head pressure[c]	(ft H_2O)	78.2	77.7	71.1	67.6	67.1	58.6	76.7	63.5	82.0	78.1	69.0	61.9	71.3	62.2
Power	(HP)	5	5	5	5	5	5	7.5	7.5	10	10	10	10	15	15
Expansion tank volume	(gal)	5	5	5	5	5	5	5	5	6	6	6	6	6	6
Buffer tank volume	(gal)	140	140	140	140	140	140	140	140	152	152	195	195	195	195
Partial Heat Recovery															
Water storage/ckt[a]	(gal)	0.02	0.02	0.02	0.03	0.02	0.02	0.02	0.03	0.03	0.04	0.04	0.04	0.06	0.06
Max flow	(gpm)	39	39	39	39	78	78	78	78	127	127	127	127	127	127
Water connection	(in)	1.5	1.5	1.5	1.5	1.5	1.5	1.5	1.5	2.5	2.5	2.5	2.5	2.5	2.5

(a) Data shown for one circuit only. The second circuit always matches.
(b) Microchannel coils are split horizontally between the condenser and subcooler coil.
(c) Pump available head pressure is based on 44/54°F evaporator with water, .0001 hr-ft^2-°F/Btu, 95°F ambient and 0 ft elevation.

Table 2. General data - 60 Hz - high efficiency - SI

Size		20	26	30	35	40	52	60	70	80	90	100	110	120	130
Compressor															
Number	#	2	2	2	2	4	4	4	4	4	4	4	4	4	6
Tonnage/ckt[a]		10+10	13+13	15+15	15+20	10+10	13+13	15+15	15+20	20+20	20+25	25+25	25+30	30+30	20+20 +25
Evaporator															
Water storage	(l)	5.3	8.3	8.3	12.1	9.1	15.5	18.9	28.4	26.5	34.1	39.0	43.5	43.5	46.6
Min. flow	(l/s)	1.8	2.3	2.6	3.1	3.6	4.6	5.3	6.3	7.2	8.1	9.1	9.9	10.7	11.6
Max. flow	(l/s)	4.4	5.6	6.3	7.4	8.6	11.1	12.7	15.1	17.4	19.4	21.9	23.7	25.7	27.8
Water connection	(mm)	50.8	63.5	63.5	63.5	76.2	76.2	76.2	76.2	101.6	101.6	101.6	101.6	101.6	101.6
Condenser															
Round Tube and Plate Fin Coils															
Qty of coils	#	1	1	1	1	2	2	2	2	4	4	4	4	4	4
Coil length	(mm)	2311	2311	3226	3226	2311	2311	3226	3226	3073	3073	3658	3658	3658	4572
Coil height	(mm)	1727	1727	1727	1727	1727	1727	1727	1727	1067	1067	1067	1067	1067	1067
Number of rows	#	2	2	2	2	2	2	2	2	3	3	3	3	3	3
Fins per foot	(fpf)	192	192	192	192	192	192	192	192	192	192	192	192	192	192
Microchannel Coils															
Quantity of coils	#	1	1	1	1	2	2	2	2	8	8	8	8	8	8
Coil length	(mm)	2311	2311	3226	3226	2311	2311	3226	3226	1727+ 1168	1727+ 1168	1727+ 1727	1727+ 1727	1727+ 1727	1727+ 2642
Coil height[b]	(mm)	1067+ 254	1067+ 254	1067+ 254	1067+ 254	1067+ 254	1067+ 254	1067+ 254	1067+ 254	864+ 178	864+ 178	864+ 178	864+ 178	864+ 178	864+ 178
Tube width	(mm)	25.4	25.4	25.4	25.4	25.4	25.4	25.4	25.4	25.4	25.4	25.4	25.4	25.4	25.4
Fan															
Quantity	#	2	2	3	3	4	4	6	6	4	6	8	8	8	10
Diameter	(mm)	732	732	732	732	732	732	732	732	732	732	732	732	732	732
Airflow per fan	(m^3/h)	15993	16005	15577	15585	15993	16005	15577	15585	16090	16093	15451	15454	15458	15451
Power per motor	(HP)	1.3	1.3	1.3	1.3	1.3	1.3	1.3	1.3	1.3	1.3	1.3	1.3	1.3	1.3
Motor RPM	(rpm)	840	840	840	840	840	840	840	840	840	840	840	840	840	840
Tip speed	(m/s)	32	32	32	32	32	32	32	32	32	32	32	32	32	32
General Unit															
Refrig circuits	#	1	1	1	1	2	2	2	2	2	2	2	2	2	2
Capacity steps	%	50-100	50-100	50-100	43-100	25-50-75-100	25-50-75-100	25-50-75-100	21-43-71-100	25-50-75-100	22-44-72-100	25-50-75-100	23-45-73-100	25-50-75-100	15-31-46-62-81-100
Min ambient - wide	(°C)	-18	-18	-18	-18	-18	-18	-18	-18	-18	-18	-18	-18	-18	-18
Min ambient - high	(°C)	0	0	0	0	0	0	0	0	0	0	0	0	0	0
Min ambient - extreme low	(°C)	-28.9	-28.9	-28.9	-28.9	-28.9	-28.9	-28.9	-28.9	-28.9	-28.9	-28.9	-28.9	-28.9	-28.9
Round Tube and Plate Fin Coils															
Refrig charge/ckt[a]	(kg)	14.5	15.4	20	21.8	14.5	14.5	20	21.8	33.6	35.4	40.8	39	39	50.8
Oil charge /ckt[a]	(l)	6.6	6.6	7.2	13.4	6.6	6.6	7.2	13.4	13.4	13.4	13.4	13.9	14.4	22.0
Microchannel Coils															
Refrig charge/ckt[a]	(kg)	8.6	10.2	12.7	15.9	8.6	9.3	12.7	16.1	20.4	21.3	22.2	20.9	22.7	29.9
Oil charge /ckt[a]	(l)	5.4	5.4	5.9	11.0	5.4	5.4	5.9	11.0	11.0	11.0	11.0	11.4	11.8	18.0

Table 2. General data - 60 Hz - high efficiency - SI (continued)

Size		20	26	30	35	40	52	60	70	80	90	100	110	120	130
Pump Package															
Avail head pressure[c]	(kPa)	233.7	232.3	212.6	202.1	200.6	175.0	229.2	189.7	245.1	233.3	206.3	185.0	213.1	185.8
Power	(HP)	5	5	5	5	5	5	7.5	7.5	10	10	10	10	15	15
Expansion tank volume	(l)	18.9	18.9	18.9	18.9	18.9	18.9	18.9	18.9	22.7	22.7	22.7	22.7	22.7	22.7
Buffer tank volume	(l)	530	530	530	530	530	530	530	530	575	575	727	727	727	727
Partial Heat Recovery															
Water storage/ckt[a]	(l)	0.07	0.09	0.09	0.11	0.07	0.09	0.09	0.11	0.12	0.16	0.16	0.16	0.21	0.21
Max flow	(l/s)	2.5	2.5	2.5	2.5	5.0	5.0	5.0	5.0	8.0	8.0	8.0	8.0	8.0	8.0
Water connection	(mm)	38.1	38.1	38.1	38.1	38.1	38.1	38.1	38.1	63.5	63.5	63.5	63.5	63.5	63.5

(a) Data shown for one circuit only. The second circuit always matches.
(b) Microchannel coils are split horizontally between the condenser and subcooler coil.
(c) Pump available head pressure is based on 6.7/12.2°C evaporator with water, .01761 m²°C/kW, 35°C ambient and 0 m elevation.

Table 3. General data - 50 Hz - high efficiency - IP

Size		20	26	30	35	40	52	60	70	80	90	100	110	120
Compressor														
Number	#	2	2	2	2	4	4	4	4	4	4	4	4	4
Tonnage/ckt[a]		10+10	13+13	15+15	15+20	10+10	13+13	15+15	15+20	20+20	20+25	25+25	25+30	30+30
Evaporator														
Water storage	(gal)	1.4	2.2	2.2	3.2	2.4	4.1	5.0	7.5	7.0	9.0	10.3	11.5	11.5
Min. flow	(gpm)	25	32	36	41	48	62	71	83	97	109	123	133	142
Max. flow	(gpm)	59	75	85	98	115	149	170	199	234	262	296	319	341
Water connection	(in)	2	2.5	2.5	2.5	3	3	3	3	4	4	4	4	4
Condenser														
Round Tube and Plate Fin Coils														
Quantity of coils	#	1	1	1	1	2	2	2	2	4	4	4	4	4
Coil length	(in)	91	91	127	127	91	91	127	127	121	121	144	144	144
Coil height	(in)	68	68	68	68	68	68	68	68	42	42	42	42	42
Number of rows	#	2	2	2	2	2	2	2	2	3	3	3	3	3
Fins per foot	(fpf)	192	192	192	192	192	192	192	192	192	192	192	192	192
Microchannel Coils														
Quantity of coils	#	1	1	1	1	2	2	2	2	8	8	8	8	8
Coil length	(in)	91	91	127	127	91	91	127	127	68+46	68+46	68+68	68+68	68+68
Coil height[b]	(in)	42+10	42+10	42+10	42+10	42+10	42+10	42+10	42+10	34+7	34+7	34+7	34+7	34+7
Tube width	(in)	1	1	1	1	1	1	1	1	1	1	1	1	1
Fan														
Quantity	#	2	2	3	3	4	4	6	6	6	6	8	8	8
Diameter	(in)	28.8	28.8	28.8	28.8	28.8	28.8	28.8	28.8	28.8	28.8	28.8	28.8	28.8
Airflow per fan	(cfm)	7796	7783	7587	7590	7795	7801	7587	7590	7827	7829	7503	7505	7506
Power per motor	(HP)	1.3	1.3	1.3	1.3	1.3	1.3	1.3	1.3	1.3	1.3	1.3	1.3	1.3
Motor RPM	(rpm)	700	700	700	700	700	700	700	700	700	700	700	700	700
Tip speed	(ft/min)	5278	5278	5278	5278	5278	5278	5278	5278	5278	5278	5278	5278	5278
General Unit														
Refrig circuits	#	1	1	1	1	2	2	2	2	2	2	2	2	2
Capacity steps	%	50-100	50-100	50-100	43-100	25-50-75-100	25-50-75-100	25-50-75-100	21-43-71-100	25-50-75-100	22-44-72-100	25-50-75-100	23-45-73-100	25-50-75-100
Min ambient - wide	(°F)	0	0	0	0	0	0	0	0	0	0	0	0	0
Min ambient - high	(°F)	32	32	32	32	32	32	32	32	32	32	32	32	32
Round Tube and Plate Fin Coils														
Refrig charge/ckt[a]	(lbs)	32	34	44	48	32	32	44	48	74	78	90	86	86
Oil charge/ckt[a]	(gal)	1.7	1.7	1.9	3.5	1.7	1.7	1.9	3.5	3.5	3.5	3.5	3.7	3.8
Microchannel Coils														
Refrig charge/ckt[a]	(lbs)	19	22.5	28	35	19	20.5	28	35.5	45	47	49	46	50
Oil charge/ckt[a]	(gal)	1.4	1.4	1.6	2.9	1.4	1.4	1.6	2.9	2.9	2.9	2.9	3.0	3.1
Partial Heat Recovery														
Water storage/ckt[a]	(gal)	0.02	0.02	0.02	.02	0.02	0.02	0.02	0.02	0.03	0.03	0.03	0.04	0.04
Max flow	(gpm)	39	39	39	39	78	78	78	78	127	127	127	127	127
Water connection	(in)	1.5	1.5	1.5	1.5	1.5	1.5	1.5	1.5	2.5	2.5	2.5	2.5	2.5

(a) Data shown for one circuit only. The second circuit always matches.
(b) Microchannel coils are split horizontally between the condenser and subcooler coil.

Table 4. General data - 50 Hz - high efficiency - SI

Size		20	26	30	35	40	52	60	70	80	90	100	110	120
Compressor														
Number	#	2	2	2	2	4	4	4	4	4	4	4	4	4
Tonnage/ckt[a]		10+10	13+13	15+15	15+20	10+10	13+13	15+15	15+20	20+20	20+25	25+25	25+30	30+30
Evaporator														
Water storage	(l)	5.3	8.3	8.3	12.1	9.1	15.5	18.9	28.4	26.5	34.1	39.0	43.5	43.5
Min. flow	(l/s)	1.6	2.0	2.2	2.6	3.0	3.9	4.4	5.2	6.1	6.8	7.7	8.3	8.9
Max. flow	(l/s)	3.7	4.8	5.4	6.2	7.3	9.4	10.8	12.6	14.8	16.5	18.7	20.2	21.6
Water connection	(mm)	50.8	63.5	63.5	63.5	76.2	76.2	76.2	76.2	101.6	101.6	101.6	101.6	101.6
Condenser														
Round Tube and Plate Fin Coils														
Quantity of coils	#	1	1	1	1	2	2	2	2	4	4	4	4	4
Coil length	(mm)	2311	2311	3226	3226	2311	2311	3226	3226	3073	3073	3658	3658	3658
Coil height	(mm)	1727	1727	1727	1727	1727	1727	1727	1727	1067	1067	1067	1067	1067
Number of rows	#	2	2	2	2	2	2	2	2	3	3	3	3	3
Fins per foot	(fpf)	192	192	192	192	192	192	192	192	192	192	192	192	192
Microchannel Coils														
Quantity of coils	#	1	1	1	1	2	2	2	2	8	8	8	8	8
Coil length	(mm)	2311	2311	3226	3226	2311	2311	3226	3226	1727+ 1168	1727+ 1168	1727+ 1727	1727+ 1727	1727+ 1727
Coil height[b]	(mm)	1067+ 254	1067+ 254	1067+ 254	1067+ 254	1067+ 254	1067+ 254	1067+ 254	1067+ 254	864+ 178	864+ 178	864+ 178	864+ 178	864+ 178
Tube width	(mm)	25.4	25.4	25.4	25.4	25.4	25.4	25.4	25.4	25.4	25.4	25.4	25.4	25.4
Fan														
Quantity	#	2	2	3	3	4	4	6	6	6	6	8	8	8
Diameter	(mm)	732	732	732	732	732	732	732	732	732	732	732	732	732
Airflow per fan	(m^3/h)	13245	13223	12890	12895	13244	13254	12890	12895	13298	13302	12748	12751	12753
Power per motor	(HP)	1.3	1.3	1.3	1.3	1.3	1.3	1.3	1.3	1.3	1.3	1.3	1.3	1.3
Motor RPM	(rpm)	700	700	700	700	700	700	700	700	700	700	700	700	700
Tip speed	(m/s)	26.8	26.8	26.8	26.8	26.8	26.8	26.8	26.8	26.8	26.8	26.8	26.8	26.8
General Unit														
Refrig circuits	#	1	1	1	1	2	2	2	2	2	2	2	2	2
Capacity steps	%	50-100	50-100	50-100	43-100	25-50-75-100	25-50-75-100	25-50-75-100	21-43-71-100	25-50-75-100	22-44-72-100	25-50-75-100	23-45-73-100	25-50-75-100
Min ambient - wide	(°C)	-18	-18	-18	-18	-18	-18	-18	-18	-18	-18	-18	-18	-18
Min ambient - high	(°C)	0	0	0	0	0	0	0	0	0	0	0	0	0
Round Tube and Plate Fin Coils														
Refrig charge/ckt[a]	(kg)	14.5	15.4	20	21.8	14.5	14.5	20	21.8	33.6	35.4	40.8	39	39
Oil charge/ckt[a]	(l)	6.6	6.6	7.2	13.4	6.6	6.6	7.2	13.4	13.4	13.4	13.4	13.9	14.4
Microchannel Coils														
Refrig charge/ckt[a]	(kg)	8.6	10.2	12.7	15.9	8.6	9.3	12.7	16.1	20.4	21.3	22.2	20.9	22.7
Oil charge/ckt[a]	(l)	5.4	5.4	5.9	11.0	5.4	5.4	5.9	11.0	11.0	11.0	11.0	11.4	11.8
Partial Heat Recovery														
Water storage/ckt[a]	(l)	0.07	0.07	0.09	0.09	0.07	0.07	0.09	0.09	0.12	0.12	0.12	0.16	0.16
Max flow	(l/s)	2.5	2.5	2.5	2.5	5.0	5.0	5.0	5.0	8.0	8.0	8.0	8.0	8.0
Water connection	(mm)	38.1	38.1	38.1	38.1	38.1	38.1	38.1	38.1	63.5	63.5	63.5	63.5	63.5

(a) Data shown for one circuit only. The second circuit always matches.
(b) Microchannel coils are split horizontally between the condenser and subcooler coil.

Table 5. General data - 60 Hz - extra efficiency - IP

Size		20	26	30	35	40	52	60	70	110	120
Compressor											
Number	#	2	2	2	2	4	4	4	4	4	4
Tonnage/ckt[a]		10+10	13+13	15+15	15+20	10+10	13+13	15+15	15+20	25+30	30+30
Evaporator											
Water storage	(gal)	1.4	2.2	2.2	3.2	2.4	4.1	5.0	7.5	11.5	11.5
Min. flow	(gpm)	30	38	42	50	57	74	84	100	157	170
Max. flow	(gpm)	69	89	100	117	136	176	201	238	375	407
Water connection	(in)	2	2.5	2.5	2.5	3	3	3	3	4	4
Condenser											
				Round Tube and Plate Fin Coils							
Quantity of coils	#	1	1	1	1	2	2	2	2	4	4
Coil length	(in)	91	91	127	127	91	91	127	127	144	144
Coil height	(in)	68	68	68	68	68	68	68	68	42	42
Number of rows	#	3	3	3	3	3	3	3	3	3	3
Fins per foot	(fpf)	192	192	192	192	192	192	192	192	192	192
Fan											
Quantity	#	2	2	3	3	4	4	6	6	8	8
Diameter	(in)	28.8	28.8	28.8	28.8	28.8	28.8	28.8	28.8	28.8	28.8
Airflow per fan	(cfm)	9413	9420	9168	9173	9413	9420	9168	9173	9096	9098
Power per motor	(HP)	1.3	1.3	1.3	1.3	1.3	1.3	1.3	1.3	1.3	1.3
Motor RPM	(rpm)	840	840	840	840	840	840	840	840	840	840
Tip speed	(ft/min)	6333	6333	6333	6333	6333	6333	6333	6333	6333	6333
General Unit											
Refrig circuits	#	1	1	1	1	2	2	2	2	2	2
Capacity steps	%	50-100	50-100	50-100	43-100	25-50-75-100	25-50-75-100	25-50-75-100	21-43-71-100	23-45-73-100	25-50-75-100
Min ambient - wide	(°F)	0	0	0	0	0	0	0	0	0	0
Min ambient - high	(°F)	32	32	32	32	32	32	32	32	32	32
				Round Tube and Plate Fin Coils							
Refrig charge/ckt[a]	(lbs)	45	48	62	68	42	42	57	62	86	86
Oil charge/ckt[a]	(gal)	1.7	1.7	1.9	3.5	1.7	1.7	1.9	3.5	3.7	3.8
Pump Package											
Avail head pressure[b]	(ft H_2O)	78.2	77.7	71.1	67.6	67.1	58.6	76.7	63.5	61.9	71.3
Power	(HP)	5	5	5	5	5	5	7.5	7.5	10	15
Expansion tank volume	(gal)	5	5	5	5	5	5	5	5	6	6
Buffer tank volume	(gal)	140	140	140	140	140	140	140	140	195	195
Partial Heat Recovery											
Water storage/ckt[a]	(gal)	0.02	0.02	0.02	0.03	0.02	0.02	0.02	0.03	0.04	0.06
Max flow	(gpm)	39	39	39	39	78	78	78	78	127	127
Water connection	(in)	1.5	1.5	1.5	1.5	1.5	1.5	1.5	1.5	2.5	2.5

(a) Data shown for one circuit only. The second circuit always matches.
(b) Pump available head pressure is based on 44/54°F evaporator with water, .0001 hr-ft^2-°F/Btu, 95°F ambient and 0 ft elevation.

Table 6. General data - 60 Hz - extra efficiency - SI

Size		20	26	30	35	40	52	60	70	110	120
Compressor											
Number	#	2	2	2	2	4	4	4	4	4	4
Tonnage/ckt[a]		10+10	13+13	15+15	15+20	10+10	13+13	15+15	15+20	25+30	30+30
Evaporator											
Water storage	(l)	5.3	8.3	8.3	12.1	9.1	15.5	18.9	28.4	43.5	43.5
Min. flow	(l/s)	1.8	2.3	2.6	3.1	3.6	4.6	5.3	6.3	9.9	10.7
Max. flow	(l/s)	4.4	5.6	6.3	7.4	8.6	11.1	12.7	15.1	23.7	25.7
Water connection	(mm)	50.8	63.5	63.5	63.5	76.2	76.2	76.2	76.2	101.6	101.6
Condenser											
				Round Tube and Plate Fin Coils							
Qty of coils	#	1	1	1	1	2	2	2	2	4	4
Coil length	(mm)	2311	2311	3226	3226	2311	2311	3226	3226	3658	3658
Coil height	(mm)	1727	1727	1727	1727	1727	1727	1727	1727	1067	1067
Number of rows	#	3	3	3	3	3	3	3	3	3	3
Fins per foot	(fpf)	192	192	192	192	192	192	192	192	192	192
Fan											
Quantity	#	2	2	3	3	4	4	6	6	8	8
Diameter	(mm)	732	732	732	732	732	732	732	732	732	732
Airflow per fan	(m^3/h)	15993	16005	15577	15585	15993	16005	15577	15585	15454	15458
Power per motor	(HP)	1.3	1.3	1.3	1.3	1.3	1.3	1.3	1.3	1.3	1.3
Motor RPM	(rpm)	840	840	840	840	840	840	840	840	840	840
Tip speed	(m/s)	32	32	32	32	32	32	32	32	32	32
General Unit											
Refrig circuits	#	1	1	1	1	2	2	2	2	2	2
Capacity steps	%	50-100	50-100	50-100	43-100	25-50-75-100	25-50-75-100	25-50-75-100	21-43-71-100	23-45-73-100	25-50-75-100
Min ambient - wide	(°C)	-18	-18	-18	-18	-18	-18	-18	-18	-18	-18
Min ambient - high	(°C)	0	0	0	0	0	0	0	0	0	0
				Round Tube and Plate Fin Coils							
Refrig charge/ckt[a]	(kg)	20.4	21.8	28.1	30.8	19.1	19.1	25.9	28.1	39	39
Oil charge /ckt[a]	(l)	6.6	6.6	7.2	13.4	6.6	6.6	7.2	13.4	13.9	14.4
Pump Package											
Avail head pressure[b]	(kPa)	233.7	232.3	212.6	202.1	200.6	175.0	229.2	189.7	185.0	213.1
Power	(HP)	5	5	5	5	5	5	7.5	7.5	10	15
Expansion tank volume	(l)	18.9	18.9	18.9	18.9	18.9	18.9	18.9	18.9	22.7	22.7
Buffer tank volume	(l)	530	530	530	530	530	530	530	530	727	727
Partial Heat Recovery											
Water storage/ckt[a]	(l)	0.07	0.09	0.09	0.11	0.07	0.09	0.09	0.11	0.16	0.21
Max flow	(l/s)	2.5	2.5	2.5	2.5	5.0	5.0	5.0	5.0	8.0	8.0
Water connection	(mm)	38.1	38.1	38.1	38.1	38.1	38.1	38.1	38.1	63.5	63.5

(a) Data shown for one circuit only. The second circuit always matches.
(b) Pump available head pressure is based on 6.7/12.2°C evaporator with water, .01761 m²°C/kW, 35°C ambient and 0 m elevation.

Table 7. General data - 50 Hz - extra efficiency - IP

Size		20	26	30	35	40	52	60	70	110	120
Compressor											
Number	#	2	2	2	2	4	4	4	4	4	4
Tonnage/ckt[a]		10+10	13+13	15+15	15+20	10+10	13+13	15+15	15+20	25+30	30+30
Evaporator											
Water storage	(gal)	1.4	2.2	2.2	3.2	2.4	4.1	5.0	7.5	11.5	11.5
Min. flow	(gpm)	25	32	36	41	48	62	71	83	133	142
Max. flow	(gpm)	59	75	85	98	115	149	170	199	319	341
Water connection	(in)	2	2.5	2.5	2.5	3	3	3	3	4	4
Condenser											
					Round Tube and Plate Fin Coils						
Quantity of coils	#	1	1	1	1	2	2	2	2	4	4
Coil length	(in)	91	91	127	127	91	91	127	127	144	144
Coil height	(in)	68	68	68	68	68	68	68	68	42	42
Number of rows	#	2	2	2	2	2	2	2	2	3	3
Fins per foot	(fpf)	192	192	192	192	192	192	192	192	192	192
Fan											
Quantity	#	2	2	3	3	4	4	6	6	8	8
Diameter	(in)	28.8	28.8	28.8	28.8	28.8	28.8	28.8	28.8	28.8	28.8
Airflow/fan	(cfm)	7796	7783	7587	7590	7795	7801	7587	7590	7505	7506
Power/motor	(HP)	1.3	1.3	1.3	1.3	1.3	1.3	1.3	1.3	1.3	1.3
Motor RPM	(rpm)	700	700	700	700	700	700	700	700	700	700
Tip speed	(ft/min)	5278	5278	5278	5278	5278	5278	5278	5278	5278	5278
General Unit											
Refrig circuits	#	1	1	1	1	2	2	2	2	2	2
Capacity steps	%	50-100	50-100	50-100	43-100	25-50-75-100	25-50-75-100	25-50-75-100	21-43-71-100	23-45-73-100	25-50-75-100
Min ambient - wide	(°F)	0	0	0	0	0	0	0	0	0	0
Min ambient - high	(°F)	32	32	32	32	32	32	32	32	32	32
					Round Tube and Plate Fin Coils						
Refrig charge/ckt[a]	(lbs)	45	48	62	68	42	42	57	62	86	86
Oil charge/ckt[a]	(gal)	1.7	1.7	1.9	3.5	1.7	1.7	1.9	3.5	3.7	3.8
Partial Heat Recovery											
Water storage/ckt[a]	(gal)	0.02	0.02	0.02	.02	0.02	0.02	0.02	0.02	0.04	0.04
Max flow	(gpm)	39	39	39	39	78	78	78	78	127	127
Water connection	(in)	1.5	1.5	1.5	1.5	1.5	1.5	1.5	1.5	2.5	2.5

(a) Data shown for circuit one only. The second circuits always matches.

Table 8. General data - 50 Hz - extra efficiency - SI

Size		20	26	30	35	40	52	60	70	110	120
Compressor											
Number	#	2	2	2	2	4	4	4	4	4	4
Tonnage/ckt[a]		10+10	13+13	15+15	15+20	10+10	13+13	15+15	15+20	25+30	30+30
Evaporator											
Water storage	(l)	5.3	8.3	8.3	12.1	9.1	15.5	18.9	28.4	43.5	43.5
Min. flow	(l/s)	1.6	2.0	2.2	2.6	3.0	3.9	4.4	5.2	8.3	8.9
Max. flow	(l/s)	3.7	4.8	5.4	6.2	7.3	9.4	10.8	12.6	20.2	21.6
Water connection	(mm)	50.8	63.5	63.5	63.5	76.2	76.2	76.2	76.2	101.6	101.6
Condenser											
					Round Tube and Plate Fin Coils						
Quantity of coils	#	1	1	1	1	2	2	2	2	4	4
Coil length	(mm)	2311	2311	3226	3226	2311	2311	3226	3226	3658	3658
Coil height	(mm)	1727	1727	1727	1727	1727	1727	1727	1727	1067	1067
Number of rows	#	2	2	2	2	2	2	2	2	3	3
Fins per foot	(fpf)	192	192	192	192	192	192	192	192	192	192
Fan											
Quantity	#	2	2	3	3	4	4	6	6	8	8
Diameter	(mm)	732	732	732	732	732	732	732	732	732	732
Airflow/fan	(m^3/h)	13245	13223	12890	12895	13244	13254	12890	12895	12751	12753
Power/motor	(HP)	1.3	1.3	1.3	1.3	1.3	1.3	1.3	1.3	1.3	1.3
Motor RPM	(rpm)	700	700	700	700	700	700	700	700	700	700
Tip speed	(m/s)	26.8	26.8	26.8	26.8	26.8	26.8	26.8	26.8	26.8	26.8
General Unit											
Refrig circuits	#	1	1	1	1	2	2	2	2	2	2
Capacity steps	%	50-100	50-100	50-100	43-100	25-50-75-100	25-50-75-100	25-50-75-100	21-43-71-100	23-45-73-100	25-50-75-100
Min ambient - wide	(°C)	-18	-18	-18	-18	-18	-18	-18	-18	-18	-18
Min ambient - high	(°C)	0	0	0	0	0	0	0	0	0	0
					Round Tube and Plate Fin Coils						
Refrig charge/ckt[a]	(kg)	20.4	21.8	28.1	30.8	19.1	19.1	25.9	28.1	39	39
Oil charge/ckt[a]	(l)	6.6	6.6	7.2	13.4	6.6	6.6	7.2	13.4	13.9	14.4
Partial Heat Recovery											
Water storage/ckt[a]	(l)	0.07	0.07	0.09	0.09	0.07	0.07	0.09	0.09	0.16	0.16
Max flow	(l/s)	2.5	2.5	2.5	2.5	5.0	5.0	5.0	5.0	8.0	8.0
Water connection	(mm)	38.1	38.1	38.1	38.1	38.1	38.1	38.1	38.1	63.5	63.5

(a) Data shown for circuit one only. The second circuit always matches.

Controls

LCD Touch-Screen Display with Multi-Language Support

The standard DynaView display provided with the CH530 control panel features an LCD touch-screen that is navigated by file tabs. This is an advanced interface that allows the user to access any important information concerning setpoints, active temperatures, modes, electrical data, pressure, and diagnostics. It uses full text display available in 19 languages.

Display Features Include:

- LCD touch-screen with LED backlighting, for scrolling access to input and output operating information
- Single-screen, folder/tab-style display of all available information on individual components (evaporator, condenser, compressor, etc.)
- Password entry/lockout system to enable or disable display
- Automatic and immediate stop capabilities for standard or immediate manual shutdown
- Fast, easy access to available chiller data in tabbed format, including:
  - Modes of operation, including standard cooling as well as ice making
  - Water temperatures and setpoints
  - Loading and limiting status and setpoints
  - Outdoor air temperature
  - Start/stop differential timers
  - Pump status and override
  - Chilled water reset settings
- Optional external setpoints, including:
  - Chilled water, demand limit, ice building

Reports, listed on a single tabbed screen for easy access, including:

- ASHRAE reports, including all Guideline 3 information
- Evaporator, condenser, compressor reports, containing all operational information for individual components, including:
  - Water temperatures, refrigerant pressures, temperatures, and approach
  - Flow switch status, EXV position, compressor starts and run-time

Alarm and diagnostic information, including:

- Flashing alarms with touch-screen button for immediate address of alarm condition
- Scrollable list of last ten active diagnostics
- Specific information on applicable diagnostic from list of over one-hundred
- Automatic or manual resetting diagnostic types

Adaptive Control

Adaptive Control directly senses the control variables that govern the operation of the chiller: evaporator pressure and condenser pressure. When any one of these variables approaches a limit condition at which damage may occur to the unit or it may shutdown on a safety, Adaptive Control takes corrective action to avoid shutdown and keep the chiller operating. This happens through combined actions of compressor and/or fan staging. Whenever possible, the chiller is allowed to continue making chilled water. This keeps cooling capacity available until the problem can be solved. Overall, the safety controls help keep the building or process running smoothly.

Stand-Alone Controls

Single chillers installed in applications without a building management system are simple to install and control: only a remote auto/stop for scheduling is required for unit operation. Signals from the chilled-water pump contactor auxiliary, or a flow switch, are wired to the chilled-water flow interlock. Signals from a time clock or some other remote device are wired to the external auto/stop input.

- Auto/Stop — A jobsite provided contact closure turns the unit on and off.
- External Interlock — A jobsite provided contact opening wired to this input turns the unit off and requires a manual reset of the unit microcomputer. This closure is typically triggered by a job-site provided system such as a fire alarm.

Time of Day Scheduling

Time of day scheduling allows the customer to perform simple chiller scheduling without the need for a building automation system.

This feature allows the user to set ten events in a seven day time period. For each event the user can specify an activation time and the days of the week the event is active. Any available setpoints can be specified for each event, such as the leaving chilled water temperature (standard) and the demand limit setpoint (optional if ordered).

Time of day scheduling (selectable option with chiller) is required.

Additional options that may be incorporated into the scheduling:

- External chilled water setpoint, external demand limit setpoint
- Ice-making initiation

Hardwire Points

Microcomputer controls allow simple interface with other control systems, such as time clocks, building automation systems, and ice storage systems via hardwire points. This means you have the flexibility to meet job requirements while not having to learn a complicated control system.

Remote devices are wired from the control panel to provide auxiliary control to a building automation system. Inputs and outputs can be communicated via a typical 4–20 mA electrical signal, an equivalent 2–10 Vdc signal, or by utilizing contact closures.

This setup has the same features as a stand-alone water chiller, with the possibility of having additional optional features:

- Ice making control
- External chilled water setpoint, external demand limit setpoint
- Chilled water temperature reset
- Programmable relays - available outputs are: alarm-latching, alarm-auto reset, general alarm, warning, chiller limit mode, compressor running, and Tracer control

BACnet Interface

BACnet® interface capabilities are available, with communication link via single twisted-pair wiring to a factory-installed and tested communication board.

BACnet® Interface (selectable option with chiller) is required.

BACnet® is a data communication protocol for building automation and control networks developed by American Society of Heating, Refrigerating and Air-Conditioning Engineers (ASHRAE).

LonTalk LCI-C Interface

LonTalk® (LCI-C) communications capabilities are available, with communication link via single twisted-pair wiring to factory-installed, tested communication board.

LonTalk®/Tracer® Summit Interface (selectable option with chiller) is required.

LonTalk® is a communications protocol developed by the Echelon® Corporation. The LONMARK® association develops control profiles using the LonTalk® communication protocol. LonTalk® is a unit level communications protocol.

LonTalk® Communications Interface for Chillers (LCI-C) provides a generic automation system with the LONMARK® chiller profile inputs/outputs. In addition to the standard points, Trane provides other commonly used network output variables for greater interoperability with any automation system. The complete reference list of Trane LonTalk® points is available on the LONMARK® web site.

Trane controls or another vendor's system can use the predefined list of points with ease to give the operator a complete picture of how the system is running

Tracer Summit

The chiller plant control capabilities of the Trane Tracer® Summit building automation system are unequaled in the industry. Trane's depth of experience in chillers and controls makes us a well-qualified choice for automation of chiller plants using air-cooled chillers. Our chiller plant automation software is fully pre-engineered and tested.

Required features:

- LonTalk®/Tracer® Summit Interface (selectable option with chiller)
- Building Control Unit (external device required)

Energy Efficiency

- Sequenced starting of chillers to optimize the overall chiller plant energy efficiency
  - Individual chillers operate as base, peak, or swing based on capacity and efficiency
  - Automatically rotates individual chiller operation to equalize runtime and wear between chillers.
  - Evaluates and selects the lowest energy consumption alternative from an overall system perspective.

Easy Operation and Maintenance

- Remote monitoring and control
- Displays both current operation conditions and scheduled automated control actions
- Concise reports assist in planning for preventative maintenance and verifying performance
- Alarm notification and diagnostic messages aid in quick and accurate troubleshooting

Tracer SC

The Tracer® SC system controller acts as the central coordinator for all individual equipment devices on a Tracer building automation system. The Tracer® SC scans all unit controllers to update information and coordinate building control, including building subsystems such as VAV and

chiller water systems. With this system option, the full breadth of Trane's HVAC and controls experience are applied to offer solutions to many facility issues. The LAN allows building operators to manage these varied components as one system from any personal computer with web access. The benefits of this system are:

- Improved usability with automatic data collection, enhanced data logging, easier to create graphics, simpler navigation, pre-programmed scheduling, reporting, and alarm logs.
- Flexible technology allows for system sizes from 30-120 unit controllers with any combination of LonTalk® or BACnet® unit controllers.
- LEED certification through site commissioning report, energy data collection measurement, optimizing energy performance, and maintaining indoor air quality.

Energy savings programs include: fan pressure optimization, ventilation reset, and chiller plant control (adds and subtracts chillers to meet cooling loads).

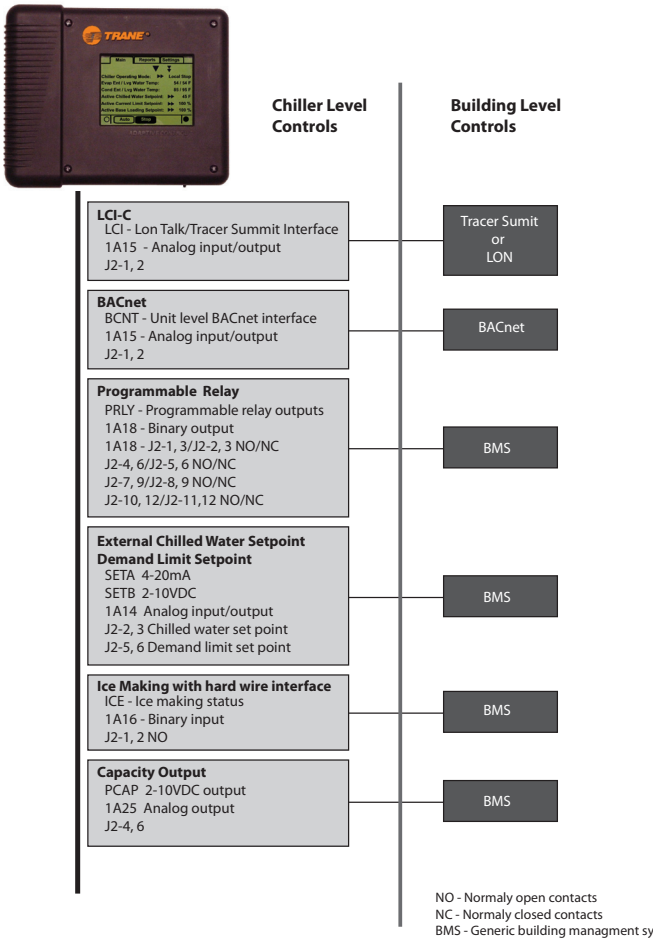

Electrical

Table 9. Electrical data - 60 Hz

Unit Size	Rated Power	Number Circuits	Qty Comp	Qty Fans	Fan Motor Power (kW)	Cond Fan FLA	Compressor RLA[a]	Compressor LRA[b]	No pump MCA[c]	No pump MOP[d]	Pump MCA[c]	Pump MOP[d]
	208/60/3	1	2	2	1	6.2	39-39	267-267	106	125	122	150
	230/60/3	1	2	2	1	6.7	39-39	267-267	106	125	122	150
20	380/60/3	1	2	2	1	3.7	22-22	160-160	60	80	n/a	
	460/60/3	1	2	2	1	3.2	19-19	142-142	51	60	64	80
	575/60/3	1	2	2	1	2.6	15-15	103-103	42	50	52	60
	208/60/3	1	2	2	1	6.2	51-51	315-315	131	175	148	175
	230/60/3	1	2	2	1	6.7	44-44	315-315	117	150	134	175
26	380/60/3	1	2	2	1	3.7	26-26	177-177	69	90	n/a	
	460/60/3	1	2	2	1	3.2	21-21	158-158	56	70	69	80
	575/60/3	1	2	2	1	2.6	19-19	126-126	50	60	59	70
	208/60/3	1	2	3	1	6.2	50-50	351-351	137	175	154	200
	230/60/3	1	2	3	1	6.7	48-48	351-351	133	175	149	175
30	380/60/3	1	2	3	1	3.7	29-29	208-208	79	100	n/a	
	460/60/3	1	2	3	1	3.2	24-24	197-197	66	90	79	100
	575/60/3	1	2	3	1	2.6	19-19	146-146	54	70	64	80
	208/60/3	1	2	3	1	6.2	53-74	320-485	169	225	186	250
	230/60/3	1	2	3	1	6.7	54-67	320-485	162	225	175	225
35	380/60/3	1	2	3	1	3.7	31-40	210-260	94	125	n/a	
	460/60/3	1	2	3	1	3.2	26-33	160-215	79	110	92	110
	575/60/3	1	2	3	1	2.6	21-26	135-175	64	90	73	90
	208/60/3	2	4	4	1	6.2	39-39/39-39	267-267/267-267	197	225	214	250
	230/60/3	2	4	4	1	6.7	39-39/39-39	267-267/267-267	198	225	214	250
40	380/60/3	2	4	4	1	3.7	22-22/22-22	160-160/160-160	112	125	n/a	
	460/60/3	2	4	4	1	3.2	19-19/19-19	142-142/142-142	95	110	108	125
	575/60/3	2	4	4	1	2.6	15-15/15-15	103-103/103-103	79	90	89	100
	208/60/3	2	4	4	1	6.2	51-51/51-51	315-315/315-315	246	250	263	300
	230/60/3	2	4	4	1	6.7	44-44/44-44	315-315/315-315	220	250	237	250
52	380/60/3	2	4	4	1	3.7	26-26/26-26	177-177/177-177	129	150	n/a	
	460/60/3	2	4	4	1	3.2	21-21/21-21	158-158/158-158	106	125	119	125
	575/60/3	2	4	4	1	2.6	19-19/19-19	126-126/126-126	93	110	103	110
	208/60/3	2	4	6	1	6.2	50-50/50-50	351-351/351-351	257	300		
	230/60/3	2	4	6	1	6.7	48-48/48-48	351-351/351-351	250	250	n/a	
60	380/60/3	2	4	6	1	3.7	29-29/29-29	208-208/208-208	149	175		
	460/60/3	2	4	6	1	3.2	24-24/24-24	197-197/197-197	125	125	141	150
	575/60/3	2	4	6	1	2.6	19-19/19-19	146-146/146-146	100	110	112	125
	208/60/3	2	4	6	1	6.2	53-74/74-54	320-485/485-320	316	350		
	230/60/3	2	4	6	1	6.7	50-67/67-50	350-485/485-350	297	350	n/a	
70	380/60/3	2	4	6	1	3.7	31-40/40-31	210-260/260-210	177	200		
	460/60/3	2	4	6	1	3.2	26-33/33-26	160-215/215-160	148	175	164	175
	575/60/3	2	4	6	1	2.6	21-26/26-21	135-175/175-135	120	125	131	150

Table 9. Electrical data - 60 Hz (continued)

Unit Size	Rated Power	Number Circuits	Qty Comp	Qty Fans	Fan Motor Power (kW)	Cond Fan FLA	Compressor RLA[a]	Compressor LRA[b]	No pump MCA[c]	No pump MOP[d]	Pump MCA[c]	Pump MOP[d]
80	208/60/3	2	4	6	1	6.2	74-74/74-74	485-485/485-485	358	400	388	450
	230/60/3	2	4	6	1	6.7	67-67/67-67	485-485/485-485	331	350	362	400
	380/60/3	2	4	6	1	3.7	40-40/40-40	260-260/260-260	194	225	n/a	
	460/60/3	2	4	6	1	3.2	33-33/33-33	215-215/215-215	162	175	186	200
	575/60/3	2	4	6	1	2.6	26-26/26-26	175-175/175-175	131	150	150	175
90	208/60/3	2	4	6	1	6.2	74-91/91-74	485-560/560-485	397	450	428	500
	230/60/3	2	4	6	1	6.7	67-85/85-67	485-560/560-485	370	450	401	450
	380/60/3	2	4	6	1	3.7	40-55/55-40	260-310/310-260	227	275	n/a	
	460/60/3	2	4	6	1	3.2	33-42/42-33	215-260/260-215	182	200	206	225
	575/60/3	2	4	6	1	2.6	26-34/34-26	175-210/210-175	149	175	168	200
100	208/60/3	2	4	8	1	6.2	91-91/91-91	560-560/560-560	444	500	475	500
	230/60/3	2	4	8	1	6.7	85-85/85-85	560-560/560-560	418	500	449	500
	380/60/3	2	4	8	1	3.7	55-55/55-55	310-310/310-310	263	300	n/a	
	460/60/3	2	4	8	1	3.2	42-42/42-42	260-260/260-260	206	225	230	250
	575/60/3	2	4	8	1	2.6	34-34/34-34	210-210/210-210	169	200	188	200
110 High Effic	208/60/3	2	4	8	1	6.2	91-110/110-91	560-680/680-560	485	500	516	600
	230/60/3	2	4	8	1	6.7	85-109/109-85	560-680/680-560	473	500	504	600
	380/60/3	2	4	8	1	3.7	55-60/60-55	310-360/360-310	275	300	n/a	
	460/60/3	2	4	8	1	3.2	42-51/51-42	260-320/320-260	226	250	250	250
	575/60/3	2	4	8	1	2.6	34-39/39-34	210-235/235-210	179	200	198	225
110 Extra Effic	208/60/3	2	4	8	1	6.2	91-114/114-91	560-500/500-560	494	600	525	600
	230/60/3	2	4	8	1	6.7	85-114/114-85	560-500/500-560	483	600	514	600
	380/60/3	n/a										
	460/60/3	2	4	8	1	3.2	42-52/52-42	260-235/235-260	229	250	253	250
	575/60/3	2	4	8	1	2.6	34-42/42-34	210-187/187-210	186	200	205	225
120 High Effic	208/60/3	2	4	8	1	6.2	110-110/110-110	680-680/680-680	521	600	n/a	
	230/60/3	2	4	8	1	6.7	109-109/109-109	680-680/680-680	522	600	568	600
	380/60/3	2	4	8	1	3.7	60-60/60-60	360-360/360-360	285	300	n/a	
	460/60/3	2	4	8	1	3.2	51-51/51-51	320-320/320-320	244	250	268	300
	575/60/3	2	4	8	1	2.6	39-39/39-39	235-235/235-235	188	225	207	225
120 Extra Effic	208/60/3	2	4	8	1	6.2	139-139/139-139	500-500/500-500	583	700	n/a	
	230/60/3	2	4	8	1	6.7	132-132/132-132	500-500/500-500	540	650	558	600
	380/60/3	n/a										
	460/60/3	2	4	8	1	3.2	62-62/62-62	235-235/235-235	249	300	285	300
	575/60/3	2	4	8	1	2.6	50-50/50-50	187-187/187-187	202	350	231	225

Table 9. Electrical data - 60 Hz (continued)

Unit Size	Rated Power	Number Circuits	Qty Comp	Qty Fans	Fan Motor Power (kW)	Cond Fan FLA	Compressor RLA[a]	Compressor LRA[b]	No pump MCA[c]	No pump MOP[d]	Pump MCA[c]	Pump MOP[d]
	208/60/3	2	6	10	1	6.2	74-74-91/91-74-74	485-485-560/ 560-485-485	569	600	n/a	
	230/60/3	2	6	10	1	6.7	67-67-85/85-67-67	485-485-560/ 560-485-485	531	600	578	600
130	380/60/3	2	6	10	1	3.7	40-40-55/55-40-40	260-260-310/ 310-260-260	321	350	n/a	
	460/60/3	2	6	10	1	3.2	33-33-42/42-33-33	215-215-260/ 260-215-215	261	300	285	300
	575/60/3	2	6	10	1	2.6	26-26-34/34-26-26	175-175-210/ 210-175-175	212	225	231	250

Notes:
1. Local codes may take precedence.
2. Voltage Utilization Range: +/- 10% of rated voltage
Rated voltage (use range): 208/60/3 (187.2-228.8), 230/60/3(208-254), 380/60/3 (342-418), 460/60/3 (414-506), 575/60/3 (516-633)
3. One separate 120/60/1, 15 amp customer provided power connection is required to power the heaters.
4. n/a - not available

(a) RLA - Rated Load Amps - Rated in accordance with UL Standard 1995.
(b) LRA - Locked Rotor Amps - Based on full winding starts.
(c) MCA - Minimum Circuit Ampacity - 125 percent of largest compressor RLA plus 100 percent of all other loads.
(d) MOP or Max fuse size - 225 percent of the largest compressor RLA plus all other loads.

Table 10. Lug size range - 60 Hz

Unit Size	Rated Power	No Pump Terminal Blocks	No Pump Std Fault Ckt Breaker[a]	No Pump High Fault Ckt Breaker[a]	Pump Terminal Blocks	Pump Std Fault Ckt Breaker[a]	Pump High Fault Ckt Breaker[a]
20	208/60/3	#6 - 350 MCM	#8 - 3/0	#8 - 3/0	#6 - 350 MCM	#4 - 4/0	#4 - 4/0
	230/60/3	#6 - 350 MCM	#8 - 3/0	#8 - 3/0	#6 - 350 MCM	#4 - 4/0	#4 - 4/0
	380/60/3	#6 - 350 MCM	#14 - 1/0	#8 - 3/0	n/a	n/a	n/a
	460/60/3	#6 - 350 MCM	#14 - 1/0	#8 - 3/0	#6 - 350 MCM	#14 - 1/0	#8 - 3/0
	575/60/3	#6 - 350 MCM	#14 - 1/0	#8 - 3/0	#6 - 350 MCM	#14 - 1/0	#8 - 3/0
26	208/60/3	#6 - 350 MCM	#4 - 4/0	#4 - 4/0	#6 - 350 MCM	#4 - 4/0	#4 - 4/0
	230/60/3	#6 - 350 MCM	#4 - 4/0	#4 - 4/0	#6 - 350 MCM	#4 - 4/0	#4 - 4/0
	380/60/3	#6 - 350 MCM	#14 - 1/0	#8 - 3/0	n/a	n/a	n/a
	460/60/3	#6 - 350 MCM	#14 - 1/0	#8 - 3/0	#6 - 350 MCM	#14 - 1/0	#8 - 3/0
	575/60/3	#6 - 350 MCM	#14 - 1/0	#8 - 3/0	#6 - 350 MCM	#14 - 1/0	#8 - 3/0
30	208/60/3	#6 - 350 MCM	3/0 - 350 MCM	3/0 - 350 MCM	#6 - 350 MCM	3/0 - 350 MCM	3/0 - 350 MCM
	230/60/3	#6 - 350 MCM	#4 - 4/0	#4 - 4/0	#6 - 350 MCM	3/0 - 350 MCM	3/0 - 350 MCM
	380/60/3	#6 - 350 MCM	#14 - 3/0	#14 - 3/0	n/a	n/a	n/a
	460/60/3	#6 - 350 MCM	#14 - 1/0	#8 - 3/0	#6 - 350 MCM	#14 - 1/0	#8 - 3/0
	575/60/3	#6 - 350 MCM	#14 - 1/0	#8 - 3/0	#6 - 350 MCM	#14 - 1/0	#8 - 3/0
35	208/60/3	#6 - 350 MCM	3/0 - 350 MCM	3/0 - 350 MCM	#6 - 350 MCM	3/0 - 350 MCM	3/0 - 350 MCM
	230/60/3	#6 - 350 MCM	3/0 - 350 MCM	3/0 - 350 MCM	#6 - 350 MCM	3/0 - 350 MCM	3/0 - 350 MCM
	380/60/3	#6 - 350 MCM	#8 - 3/0	#8 - 3/0	n/a	n/a	n/a
	460/60/3	#6 - 350 MCM	#8 - 3/0	#8 - 3/0	#6 - 350 MCM	#8 - 3/0	#8 - 3/0
	575/60/3	#6 - 350 MCM	#14 - 1/0	#8 - 3/0	#6 - 350 MCM	#14 - 1/0	#8 - 3/0
40	208/60/3	#4 - 500 MCM	3/0 - 350 MCM	3/0 - 350 MCM	#4 - 500 MCM	3/0 - 350 MCM	3/0 - 350 MCM
	230/60/3	#4 - 500 MCM	3/0 - 350 MCM	3/0 - 350 MCM	#4 - 500 MCM	3/0 - 350 MCM	3/0 - 350 MCM
	380/60/3	#4 - 500 MCM	#4 - 4/0	#4 - 4/0	n/a	n/a	n/a
	460/60/3	#4 - 500 MCM	#8 - 3/0	#8 - 3/0	#4 - 500 MCM	#4 - 4/0	#4 - 4/0
	575/60/3	#4 - 500 MCM	#8 - 3/0	#8 - 3/0	#4 - 500 MCM	#8 - 3/0	#8 - 3/0
52	208/60/3	#4 - 500 MCM	3/0 - 350 MCM	3/0 - 350 MCM	#4 - 500 MCM	#1 - 600 MCM or #1 - 250 MCM[b]	2/0 - 500 MCM[b]
	230/60/3	#4 - 500 MCM	3/0 - 350 MCM	3/0 - 350 MCM	#4 - 500 MCM	3/0 - 350 MCM	3/0 - 350 MCM
	380/60/3	#4 - 500 MCM	#4 - 4/0	#4 - 4/0		n/a	
	460/60/3	#4 - 500 MCM	#4 - 4/0	#4 - 4/0	#4 - 500 MCM	#4 - 4/0	#4 - 4/0
	575/60/3	#4 - 500 MCM	#8 - 3/0	#8 - 3/0	#4 - 500 MCM	#8 - 3/0	#8 - 3/0
60	208/60/3	#4 - 500 MCM	#1 - 600 MCM or #1 - 250 MCM[b]	2/0 - 500 MCM[b]		n/a	
	230/60/3	#4 - 500 MCM	3/0 - 350 MCM	3/0 - 350 MCM			
	380/60/3	#4 - 500 MCM	3/0 - 350 MCM	3/0 - 350 MCM			
	460/60/3	#4 - 500 MCM	#14 - 3/0	#14 - 3/0	#4 - 500 MCM	#4 - 4/0	#4 - 4/0
	575/60/3	#4 - 500 MCM	#14 - 3/0	#14 - 3/0	#4 - 500 MCM	#4 - 4/0	#4 - 4/0
70	208/60/3	#4 - 500 MCM	#1 - 600 MCM or #1 - 250 MCM[b]	2/0 - 500 MCM[b]		n/a	
	230/60/3	#4 - 500 MCM	#1 - 600 MCM or #1 - 250 MCM[b]	2/0 - 500 MCM[b]			
	380/60/3	#4 - 500 MCM	3/0 - 350 MCM	3/0 - 350 MCM			
	460/60/3	#4 - 500 MCM	#4- 4/0	#4 - 4/0	#4 - 500 MCM	3/0 - 350 MCM	3/0 - 350 MCM
	575/60/3	#4 - 500 MCM	#4- 4/0	#4 - 4/0	#4 - 500 MCM	#4- 4/0	#4 - 4/0

Notes:
1. Copper wire only, based on nameplate Minimum Circuit Ampacity (MCA).
2. Data shown for circuit one. The second circuit is always the same.
3. n/a - not available

Table 10. Lug size range - 60 Hz (continued)

Unit Size	Rated Power	No Pump Terminal Blocks	No Pump Std Fault Ckt Breaker[a]	No Pump High Fault Ckt Breaker[a]	Pump Terminal Blocks	Pump Std Fault Ckt Breaker[a]	Pump High Fault Ckt Breaker[a]
80	208/60/3	#4 - 500 MCM	#1 - 600 MCM or #1 - 350 MCM[b]	2/0 - 500 MCM²	#4 - 500 MCM²	2/0 - 500 MCM[b]	2/0 - 500 MCM[b]
	230/60/3	#4 - 500 MCM	#1 - 600 MCM or #1 - 350 MCM[b]	2/0 - 500 MCM²	#4 - 500 MCM²	#1 - 600 MCM or #1 - 350 MCM[b]	2/0 - 500 MCM[b]
	380/60/3	#4 - 500 MCM	3/0 - 350 MCM	3/0 - 350 MCM		n/a	
	460/60/3	#4 - 500 MCM	3/0 - 350 MCM	3/0 - 350 MCM	#4 - 500 MCM	3/0 - 350 MCM	3/0 - 350 MCM
	575/60/3	#4 - 500 MCM	#4- 4/0	#4 - 4/0	#4 - 500 MCM	3/0 - 350 MCM	3/0 - 350 MCM
90	208/60/3	#4 - 500 MCM[b]	2/0 - 500 MCM[b]	2/0 - 500 MCM[b]	#4 - 500 MCM[b]	2/0 - 500 MCM[b]	2/0 - 500 MCM[b]
	230/60/3	#4 - 500 MCM[b]	2/0 - 500 MCM[b]	2/0 - 500 MCM[b]	#4 - 500 MCM[b]	2/0 - 500 MCM[b]	2/0 - 500 MCM[b]
	380/60/3	#4 - 500 MCM	3/0 - 350 MCM	3/0 - 350 MCM		n/a	
	460/60/3	#4 - 500 MCM	3/0 - 350 MCM	3/0 - 350 MCM	#6 - 350 MCM	3/0 - 350 MCM	3/0 - 350 MCM
	575/60/3	#4 - 500 MCM	#4- 4/0	#4 - 4/0	#6 - 350 MCM	3/0 - 350 MCM	3/0 - 350 MCM
100	208/60/3	#4 - 500 MCM[b]	2/0 - 500 MCM[b]	2/0 - 500 MCM[b]	#6 - 350 MCM	2/0 - 500 MCM[b]	2/0 - 500 MCM[b]
	230/60/3	#4 - 500 MCM[b]	2/0 - 500 MCM[b]	2/0 - 500 MCM[b]	#6 - 350 MCM	2/0 - 500 MCM[b]	2/0 - 500 MCM[b]
	380/60/3	#4 - 500 MCM	#1 - 600 MCM or #1 - 250 MCM[b]	2/0 - 500 MCM[b]		n/a	
	460/60/3	#4 - 500 MCM	3/0 - 350 MCM	3/0 - 350 MCM	#6 - 350 MCM	3/0 - 350 MCM	3/0 - 350 MCM
	575/60/3	#4 - 500 MCM	3/0 - 350 MCM	3/0 - 350 MCM	#6 - 350 MCM	3/0 - 350 MCM	3/0 - 350 MCM
110	208/60/3	#4 - 500 MCM[b]	2/0 - 500 MCM[b]	2/0 - 500 MCM[b]	#6 - 350 MCM	2/0-500 MCM[b]	2/0-500 MCM[b]
	230/60/3	#4 - 500 MCM[b]	2/0 - 500 MCM[b]	2/0 - 500 MCM[b]	#6 - 350 MCM	2/0-500 MCM[b]	2/0-500 MCM[b]
	380/60/3	#4 - 500 MCM	#1 - 600 MCM or #1 - 250 MCM[b]	2/0 - 500 MCM[b]		n/a	
	460/60/3	#4 - 500 MCM	3/0 - 350 MCM	3/0 - 350 MCM	#6 - 350 MCM	3/0 - 350 MCM	3/0 - 350 MCM
	575/60/3	#4 - 500 MCM	3/0 - 350 MCM	3/0 - 350 MCM	#6 - 350 MCM	3/0 - 350 MCM	3/0 - 350 MCM
120	208/60/3	#4 - 500 MCM[b]	2/0 - 500 MCM[b]	2/0 - 500 MCM[b]		n/a	
	230/60/3	#4 - 500 MCM[b]	2/0 - 500 MCM[b]	2/0 - 500 MCM[b]	#6 - 350 MCM	2/0-500 MCM[b]	2/0-500 MCM[b]
	380/60/3	#4 - 500 MCM	#1 - 600 MCM or #1 - 250 MCM[b]	2/0 - 500 MCM[b]		n/a	
	460/60/3	#4 - 500 MCM	3/0 - 350 MCM	3/0 - 350 MCM	#6 - 350 MCM	#1 - 600 MCM or #1 - 250 MCM[b]	2/0 - 500 MCM[b]
	575/60/3	#4 - 500 MCM	3/0 - 350 MCM	3/0 - 350 MCM	#6 - 350 MCM	3/0 - 350 MCM	3/0 - 350 MCM
130	208/60/3	#4 - 500 MCM[b]	2/0 - 500 MCM[b]	2/0 - 500 MCM[b]		n/a	
	230/60/3	#4 - 500 MCM[b]	2/0 - 500 MCM[b]	2/0 - 500 MCM[b]	#4 - 500 MCM[b]	2/0-500 MCM[b]	2/0-500 MCM[b]
	380/60/3	#4 - 500 MCM	#1 - 600 MCM or #1 - 250 MCM[b]	2/0 - 500 MCM[b]		n/a	
	460/60/3	#4 - 500 MCM	#1 - 600 MCM or #1 - 250 MCM[b]	2/0 - 500 MCM[b]	#4 - 500 MCM	#1 - 600 MCM or #1 - 250 MCM[b]	2/0 - 500 MCM[b]
	575/60/3	#4 - 500 MCM	3/0 - 350 MCM	3/0 - 350 MCM	#4 - 500 MCM	3/0 - 350 MCM	3/0 - 350 MCM

Notes:
1. Copper wire only, based on nameplate Minimum Circuit Ampacity (MCA).
2. Data shown for circuit one. The second circuit is always the same.
3. n/a - not available

(a) Optional circuit breaker and high fault circuit breaker.
(b) Will accept two conduits per phase in this size.

Electrical

Table 11. Electrical data - 50Hz

Unit Size	Rated Power	Number Circuits	Qty Comp	Qty Fans	Fan Motor Power (kW)	Cond Fan FLA	Compressor RLA[a]	Compressor LRA[b]	MCA[c]	MOP[d]
20	400/50/3	1	2	2	1	2.4	17-17	142-142	46	60
26	400/50/3	1	2	2	1	2.4	21-21	158-158	55	70
30	400/50/3	1	2	3	1	2.4	23-23	197-197	63	80
35	400/50/3	1	2	3	1	2.4	27-33	160-215	79	110
40	400/50/3	2	4	4	1	2.4	17-17/17-17	142-142/142-142	85	100
52	400/50/3	2	4	4	1	2.4	21-21/21-21	158-158/158-158	102	110
60	400/50/3	2	4	6	1	2.4	24-24/24-24	197-197/197-197	120	125
70	400/50/3	2	4	6	1	2.4	27-33/33-27	160-215/215-160	147	175
80	400/50/3	2	4	6	1	2.4	33-33/33-33	215-215/215-215	160	175
90	400/50/3	2	4	6	1	2.4	33-43/43-33	215-260/260-215	181	200
100	400/50/3	2	4	8	1	2.4	43-43/43-43	260-260/260-260	204	225
110 High	400/50/3	2	4	8	1	2.4	43-47/47-43	260-320/260-320	214	250
110 Extra	400/50/3	2	4	8	1	2.4	43-62/62-43	260-253/253-260	245	300
120 High	400/50/3	2	4	8	1	2.4	47-47/47-47	320-320/320-320	223	250
120 Extra	400/50/3	2	4	8	1	2.4	62-62/62-62	253-253/253-253	284	300

Notes:
1. Local codes may take precedence.
2. Voltage Utilization Range: +/- 10% of rated voltage. Rated voltage (use range): 400/50/3 (360-440)
3. One separate 120/50/1, 15 amp customer provided power connection is required to power the heaters.
4. n/a - not available
5. Pump package not available with 50 Hz units.

(a) RLA - Rated Load Amps - Rated in accordance with UL Standard 1995.
(b) LRA - Locked Rotor Amps - Based on full winding starts.
(c) MCA - Minimum Circuit Ampacity - 125 percent of largest compressor RLA plus 100 percent of all other loads.
(d) MOP or Max fuse size - 225 percent of the largest compressor RLA plus all other loads.

Table 12. Lug size range - 50 Hz

Unit Size	Rated Power	Terminal Blocks	Std Fault Ckt Breaker[a]	High Fault Ckt Breaker[a]
20	400/50/3	#6 - 350 MCM	#14 - 1/0	#8 - 3/0
26	400/50/3	#6 - 350 MCM	#14 - 1/0	#8 - 3/0
30	400/50/3	#6 - 350 MCM	#14 - 3/0	#14 - 3/0
35	400/50/3	#6 - 350 MCM	#8 - 3/0	#8 - 3/0
40	400/50/3	#4 - 500 MCM	#8 - 3/0	#6 - 350 MCM
52	400/50/3	#4 - 500 MCM	#8 - 3/0	#6 - 350 MCM
60	400/50/3	#4 - 500 MCM	#14 - 3/0	#14 - 3/0
70	400/50/3	#4 - 500 MCM	#4 - 4/0	#6 - 350 MCM
80	400/50/3	#4 - 500 MCM	3/0 - 350 MCM	3/0 - 350 MCM
90	400/50/3	#4 - 500 MCM	3/0 - 350 MCM	3/0 - 350 MCM
100	400/50/3	#4 - 500 MCM	3/0 - 350 MCM	3/0 - 350 MCM
110	400/50/3	#4 - 500 MCM	3/0 - 350 MCM	3/0 - 350 MCM
120	400/50/3	#4 - 500 MCM	3/0 - 350 MCM	3/0 - 350 MCM

Notes:
1. Copper wire only, based on nameplate Minimum Circuit Ampacity (MCA).
2. Data shown for circuit one. The second circuit is always the same.

(a) Optional circuit breaker and high fault circuit breaker.

Electrical Connections

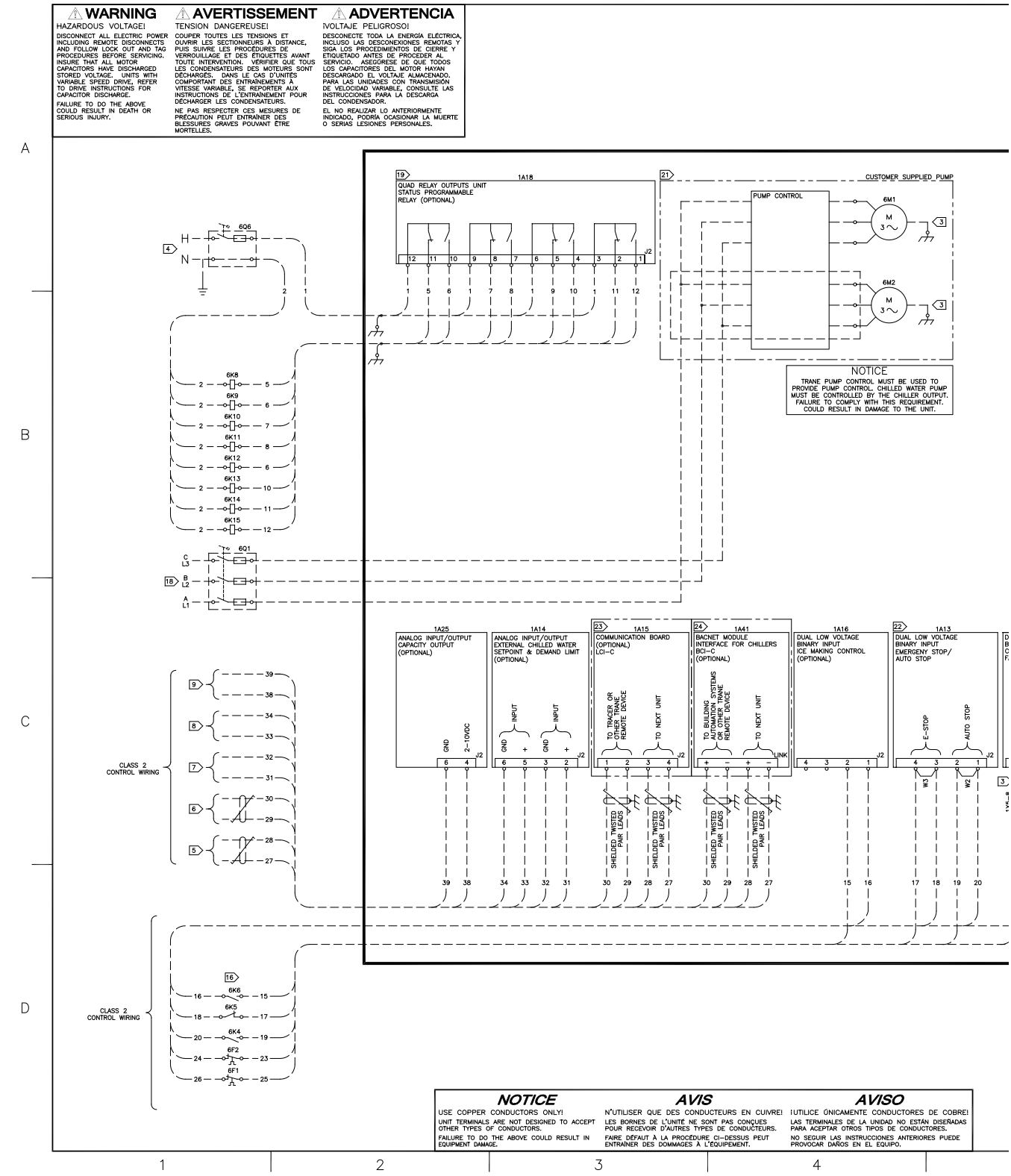

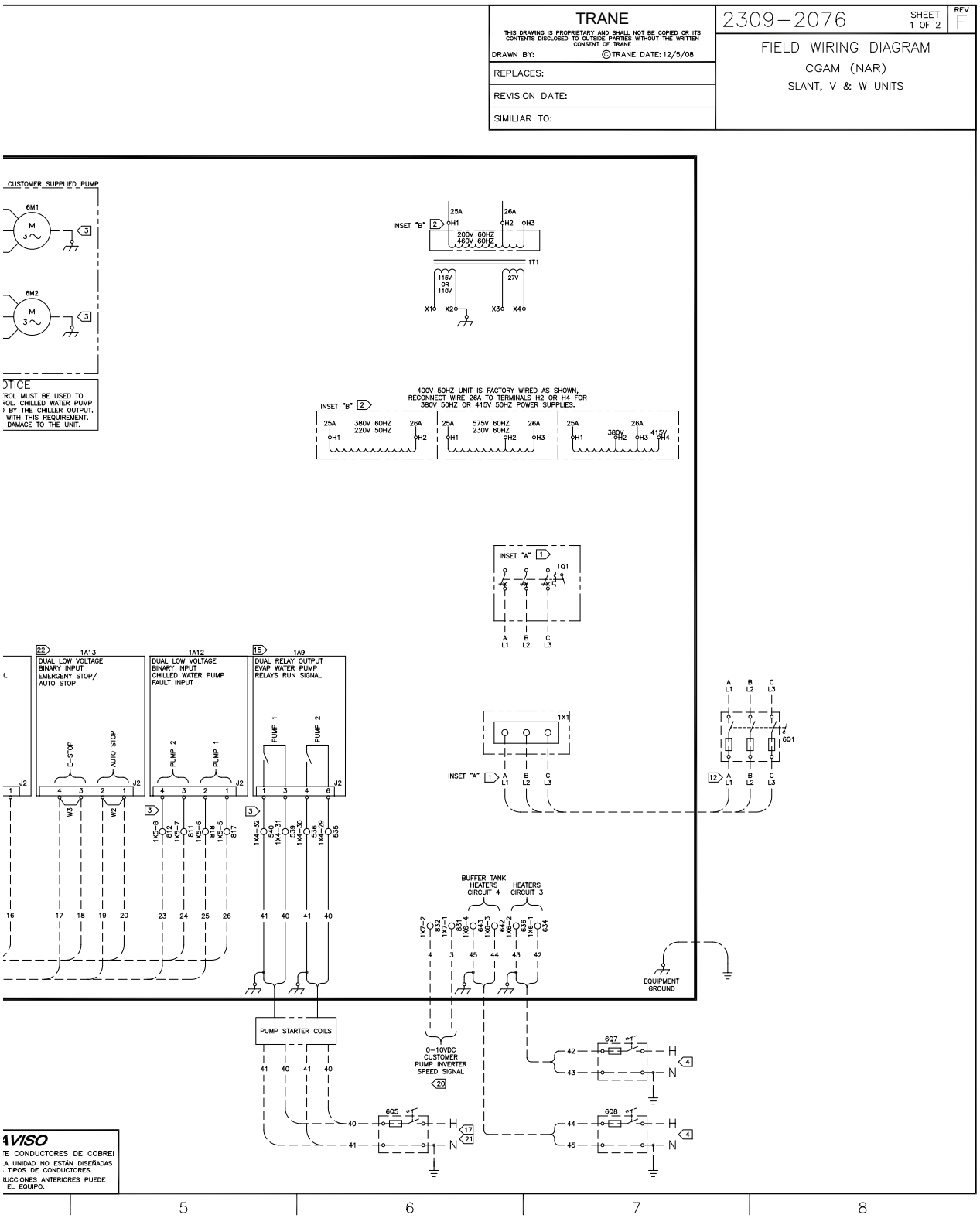
TRANE
THIS DRAWING IS PROPRIETARY AND SHALL NOT BE COPIED OR ITS CONTENTS DISCLOSED TO OUTSIDE PARTIES WITHOUT THE WRITTEN CONSENT OF TRANE
DRAWN BY:
©TRANE DATE: 12/5/08
REPLACES:
REVISION DATE:
SIMILIAR TO:
2309-2076
SHEET 1 OF 2
REV F
FIELD WIRING DIAGRAM
CGAM (NAR)
SLANT, V & W UNITS
CUSTOMER SUPPLIED PUMP
6M1
6M2
INSET "B"
200V 60HZ
460V 60HZ
1T1
115V OR 110V
27V
400V 50HZ UNIT IS FACTORY WIRED AS SHOWN, RECONNECT WIRE 26A TO TERMINALS H2 OR H4 FOR 380V 50HZ OR 415V 50HZ POWER SUPPLIES.
380V 60HZ 220V 50HZ
575V 60HZ 230V 60HZ
380V
415V
INSET "A"
1Q1
1A13
DUAL LOW VOLTAGE BINARY INPUT EMERGENCY STOP/ AUTO STOP
1A12
DUAL LOW VOLTAGE BINARY INPUT CHILLED WATER PUMP FAULT INPUT
1A9
DUAL RELAY OUTPUT EVAP WATER PUMP RELAYS RUN SIGNAL
E-STOP
AUTO STOP
PUMP 2
PUMP 1
1X1
6Q1
BUFFER TANK HEATERS CIRCUIT 4
HEATERS CIRCUIT 3
EQUIPMENT GROUND
PUMP STARTER COILS
0-10VDC CUSTOMER PUMP INVERTER SPEED SIGNAL
6Q7
6Q5
6Q8
AVISO
TE CONDUCTORES DE COBRE
A UNIDAD NO ESTÁN DISEÑADAS
TIPOS DE CONDUCTORES.
RUCCIONES ANTERIORES PUEDE
EL EQUIPO.

Electrical Connections

1 SINGLE SOURCE POWER IS PROVIDED AS STANDARD ON THESE PRODUCTS, FIELD CONNECTIONS ARE MADE TO 1X1, OR 1Q2.

2 FOR VOLTAGES 200V/60HZ, 220V/50HZ, 380V/60HZ, 460V/60HZ, WIRE 26A SHALL BE CONNECTED TO H2. FOR VOLTAGES 230V/60HZ & 575V/60HZ, WIRE 26A SHALL BE CONNECT TO H3. 400V/50HZ UNIT IS FACTORY WIRED WITH 26A CONNECTED TO H3 – RECONNECT WIRE 26A TO H2 FOR 380V/50HZ, OR H4 FOR 415V/50HZ. H4 IS ONLY AVAILABLE WITH 400V/50HZ PANELS.

3 FIELD CONNECTIONS ARE ONLY MADE IN A CUSTOMER PROVIDED PUMP (PTYP=NONE). THESE CONNECTIONS WILL BE MADE BY THE FACTORY WHEN THE PUMP IS PROVIDED BY THE FACTORY (PTYP=DHHP).

4 CUSTOMER SUPPLIED POWER 115/60/1 OR 220/50/1 TO POWER RELAYS. MAX. FUSE SIZE IS 20 AMPS. GROUND ALL CUSTOMER SUPPLIED POWER SUPPLIES AS REQUIRED BY APPLICABLE CODES. GREEN GROUND SCREWS ARE PROVIDED IN UNIT CONTROL PANEL.

5 WIRED TO NEXT UNIT. 22 AWG SHIELDED COMMUNICATION WIRE EQUIVALENT TO HELIX LF22P0014216 RECOMMENDED. THE SUM TOTAL OF ALL INTERCONNECTED CABLE SEGMENTS NOT TO EXCEED 4500 FEET. CONNECTION TOPOLOGY SHOULD BE DAISY CHAIN. REFER TO BUILDING AUTOMATION SYSTEM (BAS) COMMUNICATION INSTALLATION LITERATURE FOR END OF LINE TERMINATION RESISTOR REQUIREMENTS.

6 WIRED TO TRACER OR OTHER TRANE REMOTE DEVICE. 22 AWG SHIELDED COMMUNICATION WIRE EQUIVALENT TO HELIX LF22P0014216 RECOMMENDED. THE SUM TOTAL OF ALL INTERCONNECTED CABLE SEGMENTS NOT TO EXCEED 4500 FEET. CONNECTION TOPOLOGY SHOULD BE DAISY CHAIN. REFER TO BUILDING AUTOMATION SYSTEM (BAS) COMMUNICATION INSTALLATION LITERATURE FOR END OF LINE TERMINATION RESISTOR REQUIREMENTS.

7 WIRED TO CUSTOMER CHILLED WATER SET POINT 2–10V OR 4–20mA.

8 WIRED TO CUSTOMER EXTERNAL DEMAND LIMIT 2–10V OR 4–20mA.

9 WIRED TO CUSTOMER 2–10V OR 4–20mA % CAPACITY ANNUNICIATOR.

11. REFER TO CGAM ELECTRICAL SCHEMATIC FOR SPECIFIC ELECTRICAL CONNECTION INFORMATION AND NOTES PERTAINING TO WIRING INSTALLATION.

12 ALL UNIT POWER WIRING MUST BE 600 VOLT COPPER CONDUCTORS ONLY AND HAVE A MINIMUM TEMPERATURE INSULATION RATING OF 90 DEGREE C. REFER TO UNIT NAMEPLATE FOR MINIMUM CIRCUIT AMPACITY AND MAXIMUM OVERCURRENT PROTECTION DEVICE. PROVIDE AN EQUIPMENT GROUND IN ACCORDANCE WITH APPLICABLE ELECTRIC CODES. REFER TO WIRE RANGE TABLE FOR LUG SIZES.

13. ALL FIELD WIRING MUST BE IN ACCORDANCE WITH NATIONAL ELECTRIC CODE AND LOCAL REQUIREMENTS.

14. ALL CUSTOMER CONTROL CIRCUIT WIRING MUST BE COPPER CONDUCTORS ONLY AND HAVE A MINIMUM INSULATION RATING OF 300 VOLTS. EXCEPT AS NOTED, ALL CUSTOMER WIRING CONNECTIONS ARE MADE TO CIRCUIT BOARD MOUNTED BOX LUGS WITH A WIRE RANGE OF 14 TO 18 AWG OR DIN RAIL MOUNTED SPRING FORCE TERMINALS.

15 UNIT PROVIDED DRY CONTACTS FOR THE CONDENSER/CHILLED WATER PUMP CONTROL. RELAYS ARE RATED FOR 7.2 AMPS RESISTIVE, 2.88 AMPS PILOT DUTY, OR ½ HP, 7.2 FLA AT 120 VOLTS 60 HZ, CONTACTS ARE RATED FOR 5 AMPS GENERAL PURPOSE DUTY 240 VOLTS.

16 CUSTOMER SUPPLIED CONTACTS FOR ALL LOW VOLTAGE CONNECTIONS MUST BE COMPATABLE WITH DRY CIRCUIT 24 VOLTS DC FOR A 12 mA RESISTIVE LOAD. SILVER OR GOLD PLATED CONTACTS RECOMMENDED.

17 FIELD CONNECTIONS ARE ONLY MADE IN A CUSTOMER PROVIDED PUMP. THESE CONNECTIONS WILL BE MADE BY THE FACTORY WHEN THE PUMP IS PROVIDED BY THE FACTORY. CUSTOMER SUPPLIED POWER 115V, 60Hz, 1PH.

18 CUSTOMER SUPPLIED 3 PHASE POWER.

19 OPTIONAL FIELD ASSIGNED PROGRAMMABLE RELAYS (STAT=PRLY). CLASS 1 FIELD WIRED MODULE, RELAY AT 120V: 7.2A RESISTIVE 2.88A PILOT DUTY, 1/2HP 7.2FLA; AT 240VAC: 5 AMPS GENERAL PURPOSE.

20 WIRED TO CUSTOMER 0–10 VDC PUMP SPEED SIGNAL.

21 WHEN FACTORY PROVIDED PUMP IS NOT SELECTED. CUSTOMER MUST SUPPLY SUITABLE PUMP SYSTEM. REFER TO PUMP MANUFACTURER FOR WIRING REQUIREMENTS.

22 THE CONTACTS FOR AUTO STOP AND EMERGENCY STOP SWITCHES ARE JUMPERED AT THE FACTORY BY JUMPERS W2 & W3 TO ENABLE UNIT OPERATION. IF REMOTE CONTROL IS DESIRED, REMOVED THE JUMPERS AND CONNECT TO THE DESIRED CONTROL CIRCUIT.

23 1A15, LCI MODULE USED WHEN (COMM = LCI).

24 1A41, BACNET INTERFACE MODULE USED WHEN (COMM = BCNT).

TRANE THIS DRAWING IS PROPRIETARY AND SHALL NOT BE COPIED OR ITS CONTENTS DISCLOSED TO OUTSIDE PARTIES WITHOUT THE WRITTEN CONSENT OF TRANE DRAWN BY: © TRANE DATE: 12/5/08	2309–2076 SHEET 2 OF 2 REV F FIELD WIRING DIAGRAM CGAM (NAR) SLANT, V & W UNITS
REPLACES:	
REVISION DATE:	
SIMILIAR TO:	

FUSE REPLACEMENT TABLE

FUSE	VOLTAGE	HERTZ (Hz)	CLASS	AMPS	NOTES
1F1	ALL	ALL	CC	10	FUSE, COMPRESSOR CRANKCASE HEATER, CIRCUIT 1
1F2	ALL	ALL	CC	10	
1F3	ALL	ALL	CC	10	FUSE, COMPRESSOR CRANKCASE HEATER, CIRCUIT 2
1F4	ALL	ALL	CC	10	
1F5 – 1F6	200	60	CC	10	FUSE, CONTROL POWER TRANSFORMER, PRIMARY
	230	60	CC	8	
	380	60	CC	5	
	400	50	CC	5	
	460	60	CC	5	
	575	60	CC	4	
1F7	200	60	CC	10	FUSE, THIRD PHASE, PHASE PROTECTION MONITOR
	230	60	CC	8	
	380	60	CC	5	
	400	50	CC	5	
	460	60	CC	5	
	575	60	CC	4	
1F8 – 1F10	200	60	CC	10	FUSE, DUAL POINT, POWER SECOND PHASE, PHASE PROTECTION MONITOR
	230	60	CC	8	
	380	60	CC	5	
	400	50	CC	5	
	460	60	CC	5	
	575	60	CC	4	
1F11	ALL	ALL	CC	10	FUSE, CONTROL POWER TRANSFORMER, SECONDARY, 115V
1F12 – 1F13	ALL	ALL	CC	6	FUSE, CONTROL POWER TRANSFORMER, SECONDARY, 24V
1F14 – 1F16 1F17 – 1F19	200–460	ALL	CC	30	FUSE, INVERTER, FAN (FAST ACTING EXCEPT 575V)
	575	60	CC	6	
1F38 – 1F40 1F44 – 1F46	ALL	ALL	CC	30	FUSE, FAST ACTING, ATM–R–30
1F35 – 1F37 1F41 – 1F43	ALL	ALL	CC	30	FUSE, FAST ACTING, (USED ON W UNITS ONLY)
FACTORY PROVIDED PUMP INVERTER FUSE					
1F32 – 1F34	200,230	60	CC	30	3.7Kw VSD
	460,575			25	5.5Kw VSD
	200,230		J	60	7.5Kw VSD
	460,575		CC	30	
	200–230		J	60	11Kw VSD
	460,575			40	

4 | 5 | 6 | 7 | 8

Dimensions

Unit Dimensions

Unit without Options

Note: *The number of fans shown does not represent the number of fans installed.*

Figure 4. Dimensions, 20 to 35 ton units, no options

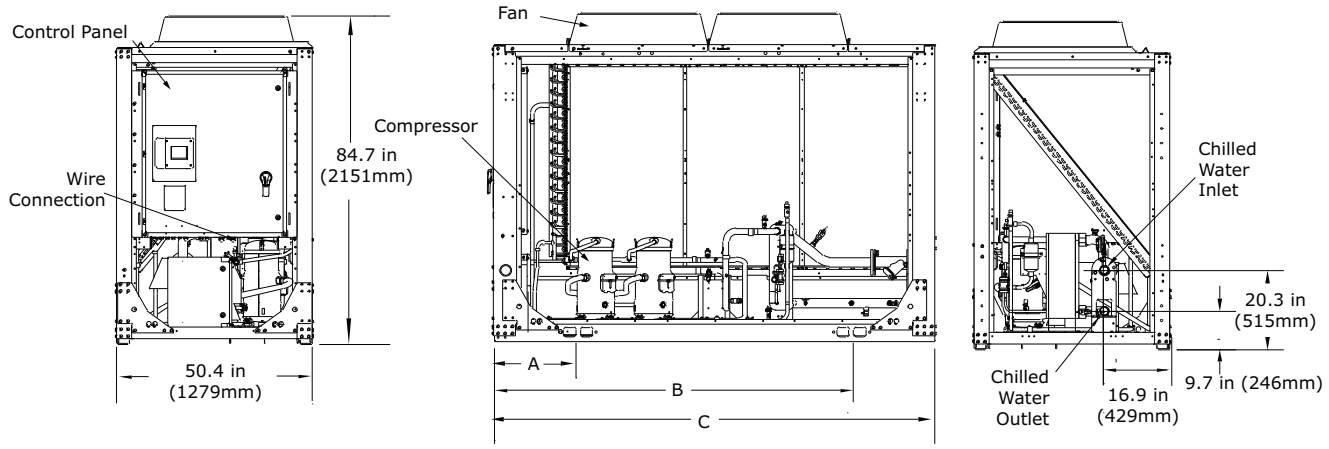

Table 13. Dimensions, 20 to 35 ton units, no options

	A		B		C		Water Connection (from end of chiller)	
Unit Size (tons)	**in**	**mm**	**in**	**mm**	**in**	**mm**	**in**	**mm**
20, 26	21.2	535	92.7	2354	113.8	2890	1.7	44
30, 35	21.3	541	128.4	3263	149.8	3804	1.6	40

Figure 5. Dimensions, 40 to 70 ton units, no options

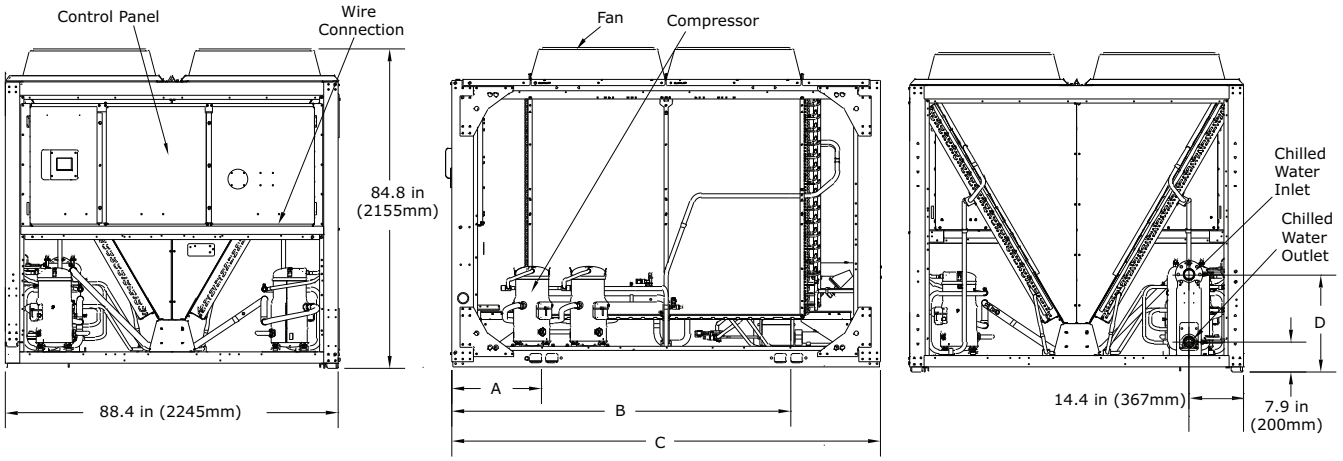

Table 14. Dimensions, 40 to 70 ton units, no options

Unit Size (tons)	A		B		C		D		Water Connection (from end of chiller)
	in	**mm**	**in**	**mm**	**in**	**mm**	**in**	**mm**	
40, 52	23.8	603	89.9	2282	113.8	2890	25.8	656	Even with unit end
60, 70	23.8	603	125.8	3196	149.8	3804	31.1	790	Even with unit end

Figure 6. Dimensions, 80 to 120 ton units, no options

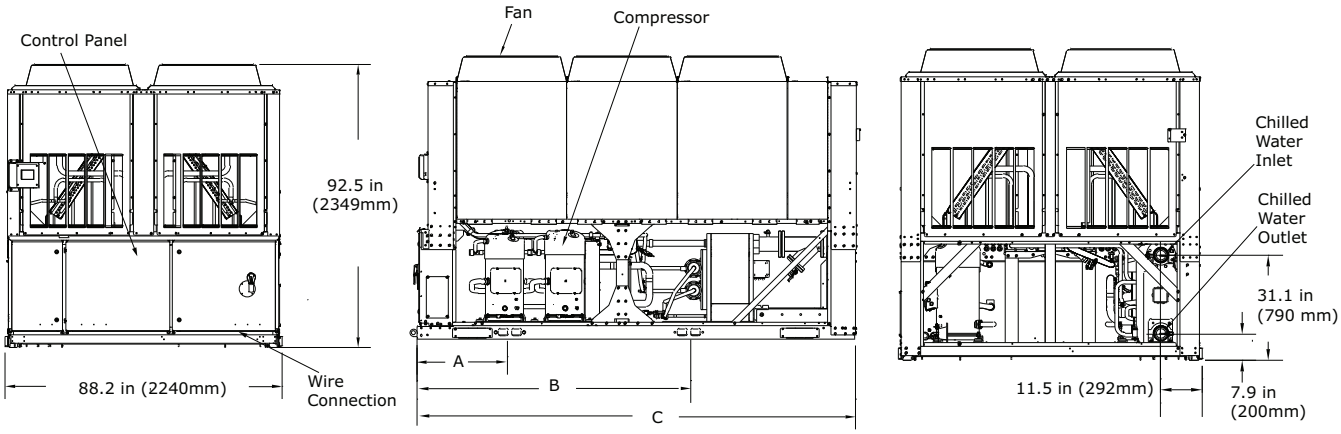

Table 15. Dimensions, 80 to 120 ton units, no options

	A		B		C		Water Connection (from end of chiller)	
Unit Size (tons)	**in**	**mm**	**in**	**mm**	**in**	**mm**	**in**	**mm**
80, 90, 100	29.6	751	89.2	2265	143.1	3634	5.5	139
110, 120	29.6	751	111.7	2837	165.9	4214	5.5	139

Figure 7. Dimensions, 130 ton unit, no options

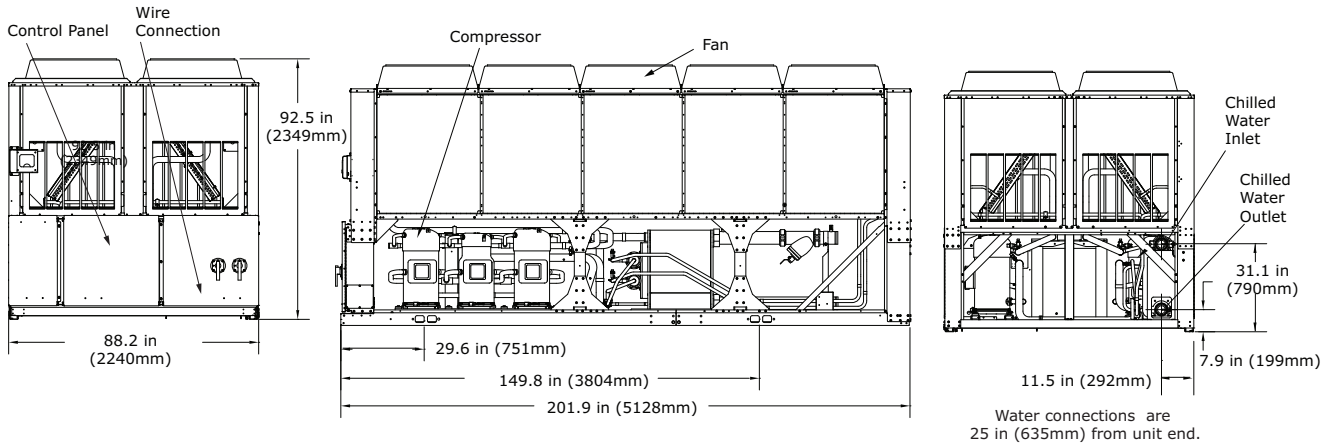

Units with Options
Pump Package, Buffer Tank, Partial Heat Recovery

General Dimensions and Components

Notes:

- *Graphics in this section, use the following acronyms:*
  PP — pump package, BT — buffer tank, PHR — Partial Heat Recovery
- *See "Water connection dimensions, 80 to 130 ton units with options," p. 46 for dimensions of water connections for various options.*

Figure 8. Dimensions, 20 to 35 ton units with options

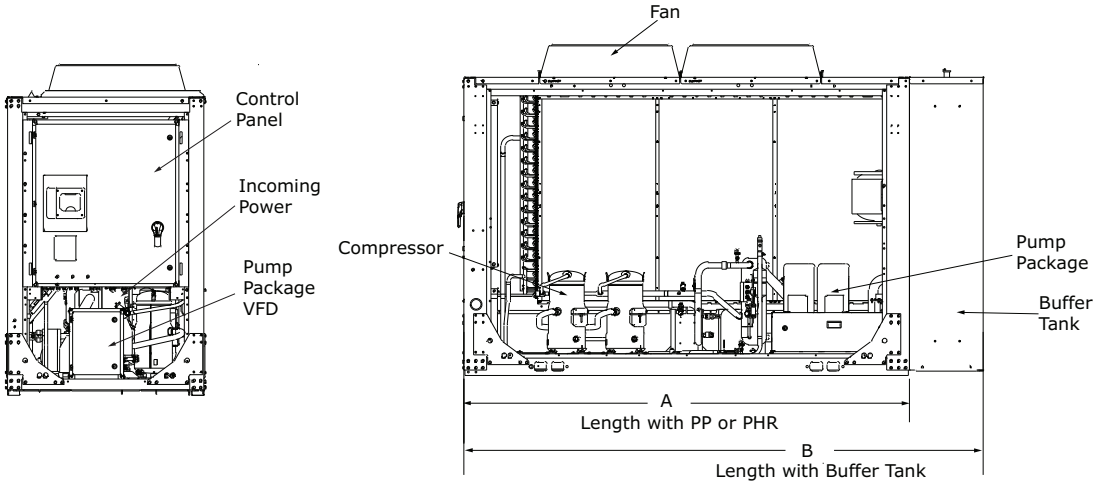

Table 16. Dimensions, 20 to 35 ton units with options

	A		B	
Unit Size (tons)	**in**	**mm**	**in**	**mm**
20, 26	113.8	2890	134.0	3404
30, 35	149.8	3804	170.1	4320

Figure 9. Dimensions, 40 to 70 ton units with options

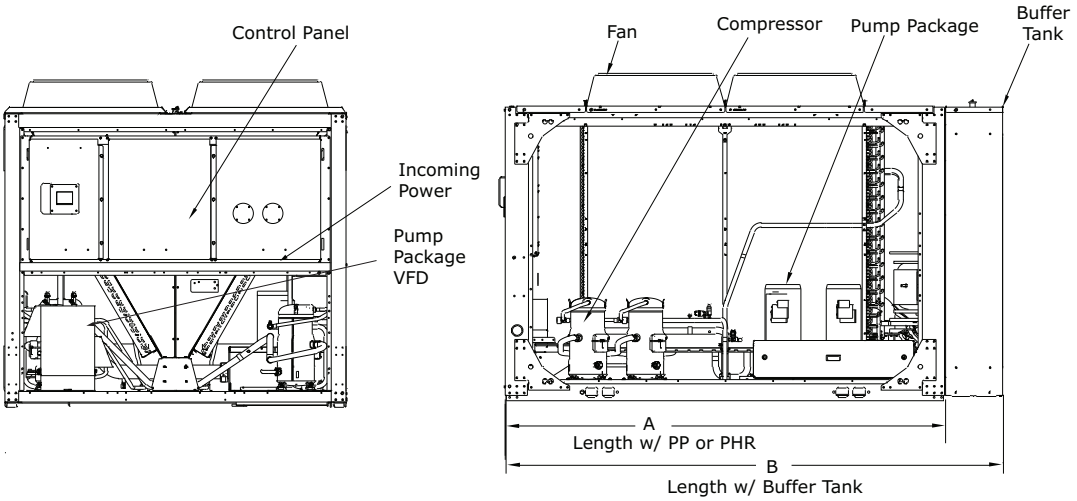

Table 17. Dimensions, 40 to 70 ton units with options

	A		B	
Unit Size (tons)	**in**	**mm**	**in**	**mm**
40, 52	113.8	2890	134.2	3409
60, 70	149.8	3804	170.0	4318

Figure 10. Dimensions, 80 to 120 ton units with options

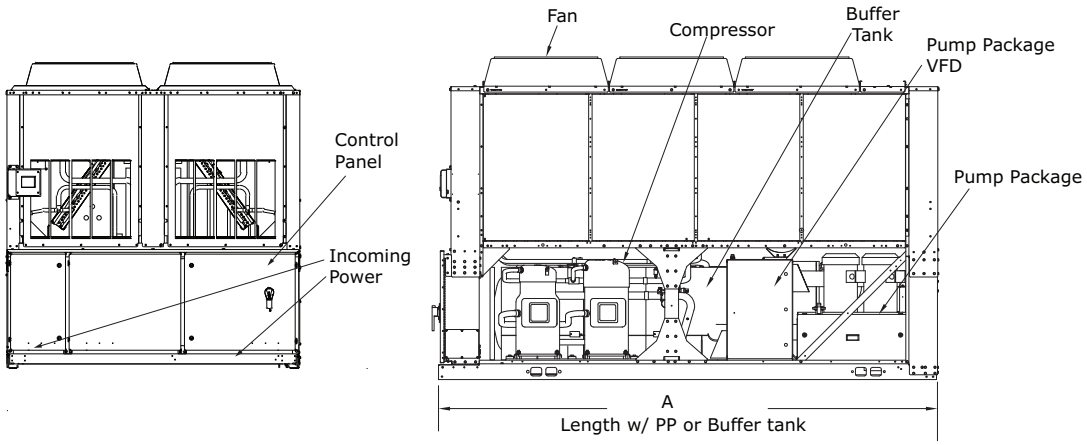

Table 18. Dimensions, 80 to 120 ton units with options

	A	
Unit Size (tons)	**in**	**mm**
80, 90, 100	143.1	3634
110, 125	165.9	4214

Note: *For PHR units, add 2.2 in (56mm) to overall length.*

Figure 11. CGAM 130 ton, with options

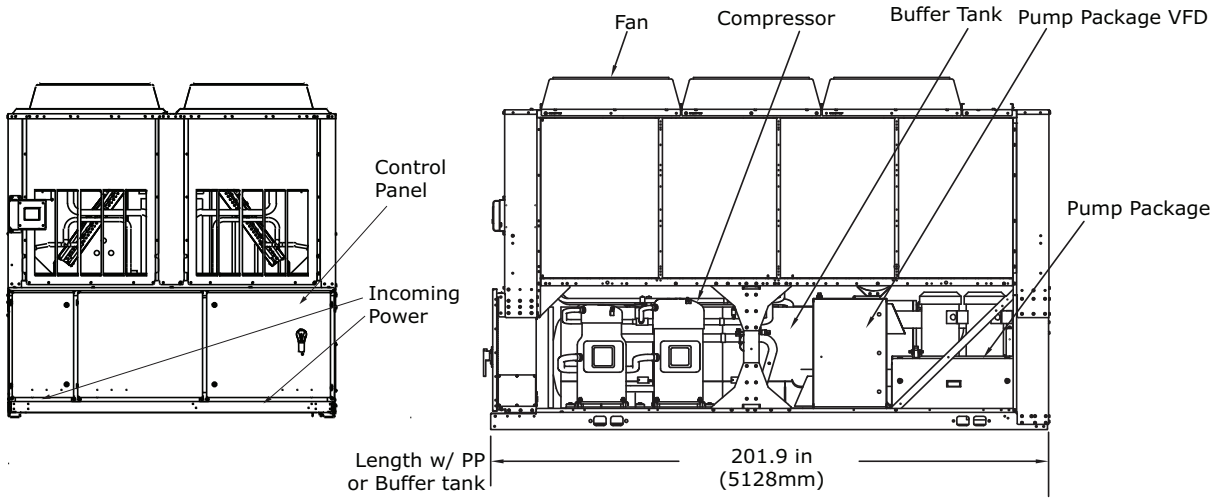

Note: *For PHR units, add 2.2 in (56mm) to overall length.*

Water Connections

Figure 12. Water connection dimensions, 20 to 35 ton units with options

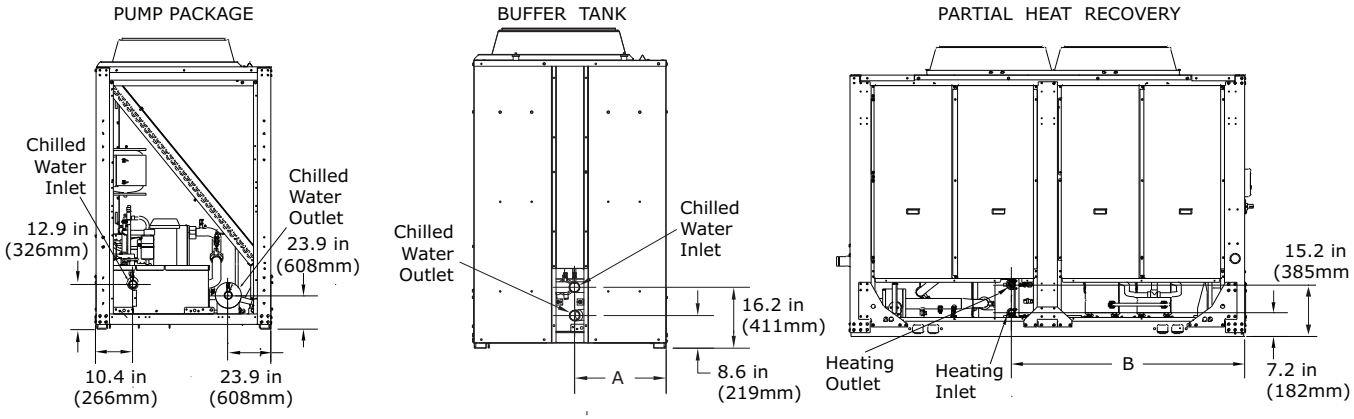

Water connections are recesssed 1.3 in (33mm) from unit end.

Water connections are recesssed from unit end.
Inlet: 3.2 in (81mm)
Outlet: 10.3 in (262mm)

Partial heat recovery connections are even with unit edge. The chilled water inlet and outlet connections are the same as the standard unit unless pump package or buffer tank are ordered.

Table 19. Water connection dimensions, 20 to 35 ton units with options

	A		B	
Unit Size (tons)	**in**	**mm**	**in**	**mm**
20, 26	24.1	613	70.3	1784
30, 35	23.9	608	67.4	1712

Figure 13. Water connection dimensions, 40 to 70 ton units with options

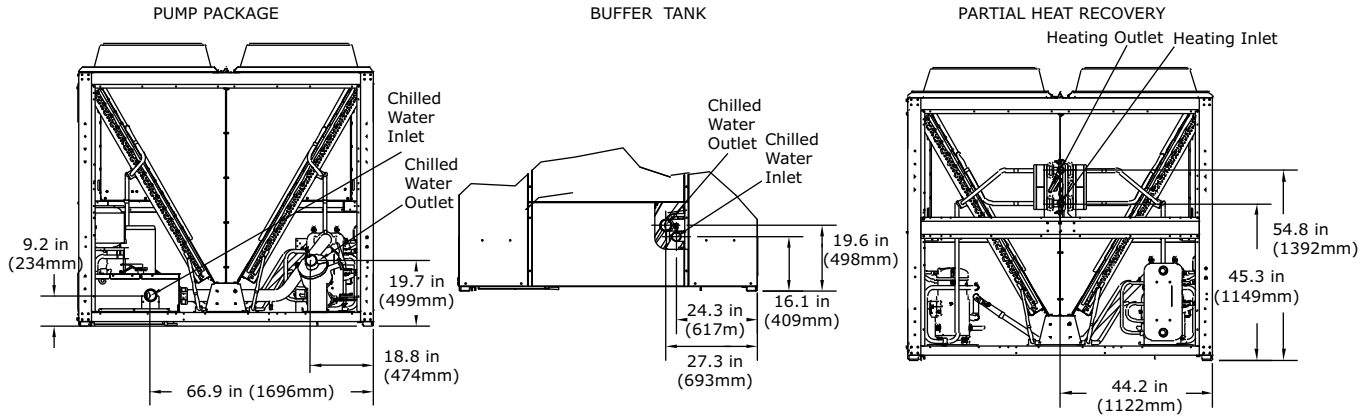

Water connections are recessed 1.3 in (33mm) from unit end.

Water connections are recessed from unit end:
Inlet:3.2 in (81mm)
Outlet: 8.5 in (216mm)

Partial heat recovery connections are even with unit end. The chilled water connections are the same as the standard unit unless pump packageor buffer tank are ordered.

Table 20. Water connection dimensions, 40 to 70 ton units with options

	A		B		C	
Unit Size (tons)	**in**	**mm**	**in**	**mm**	**in**	**mm**
40, 52	24.3	617	45.3	1149	54.8	1392
60, 70	24.2	615	45.6	1158	55.2	1401

Figure 14. Water connection dimensions, 80 to 130 ton units with options [a]

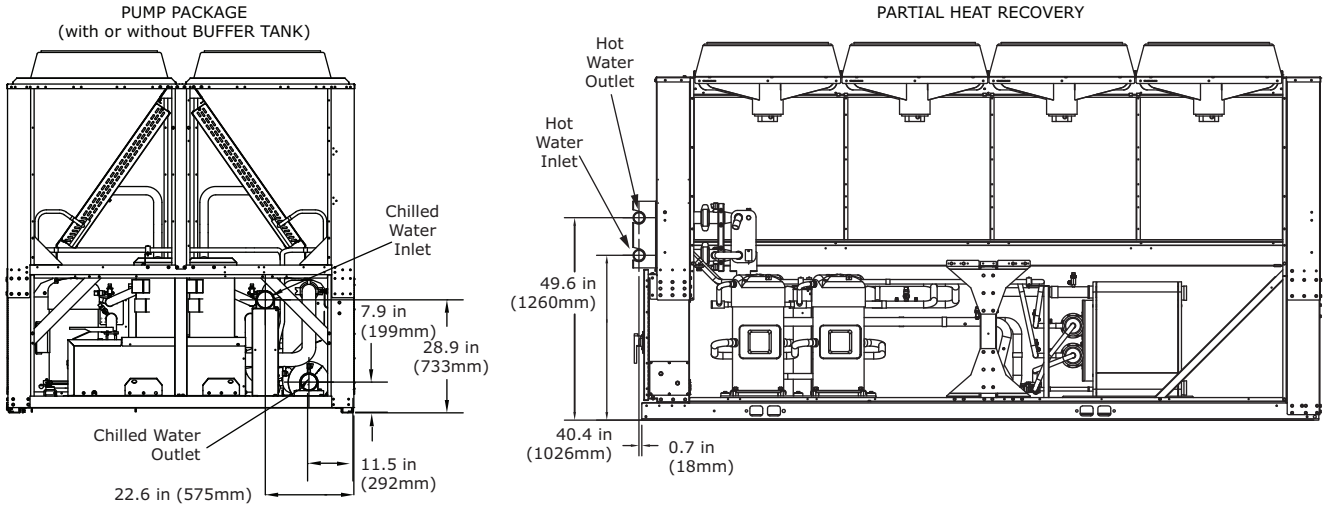

(a) See Table 21 for water connections distance from end/side of unit.

Table 21. Water connection dimensions, 80 to 130 ton units with options

	Pump Package[a]				Buffer Tank[a]				Partial Heat Recovery[b]			
	Inlet		Outlet		Inlet		Outlet		Inlet		Outlet	
Unit Size (tons)	in	mm	in	mm	in	mm	in	mm	in	mm	in	mm
80, 90T	5.9	151	5.9	151	6.2	158	6.2	158	1.1	28	1.1	28
100, 110, 120T	5.9	151	5.9	151	6	153	6	153	1.1	28	1.1	28
130T	6.3	159	25	635	5.9	150	27.7	703	1.1	28	1.1	28

(a) Distance from end of unit.
(b) Distance from side of unit.

Service Clearances

Figure 15. CGAM service clearances

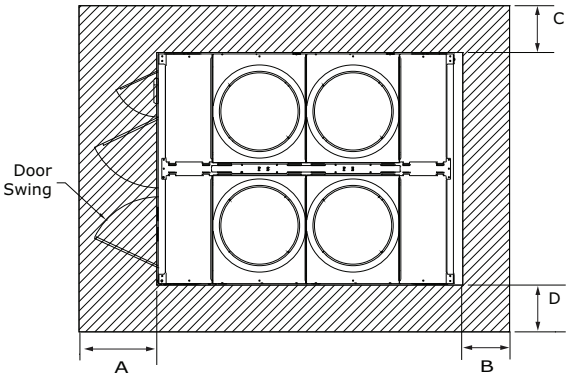

Table 22. CGAM service clearance dimensions

	A		B		C		D	
Unit Size	**in**	**mm**	**in**	**mm**	**in**	**mm**	**in**	**mm**
20 to 35 ton	47.2	1200	31.5	800	23.6	600	39.4	1000
40 to 70 ton	47.2	1200	31.5	800	39.4	1000	39.4	1000
80 to 130 ton	47.2	1200	39.4	1000	39.4	1000	39.4	1000

Notes:

- *Number of fans and panel doors shown does not represent the number of fans installed.*
- *More clearance may be needed for airflow, depending on installation.*

Mounting Locations

Important: *All mounting holes are 0.75 in (19mm) in diameter.*

Unit without Wind Load Rating

Note: *Mounting locations shown below are for units without wind load rating. For units with wind load rating (model number digit 17=D), additional mounting points are required. See* *"Units with Wind Load Rating," p. 51*.

Figure 16. Mounting locations, 20 to 35 ton

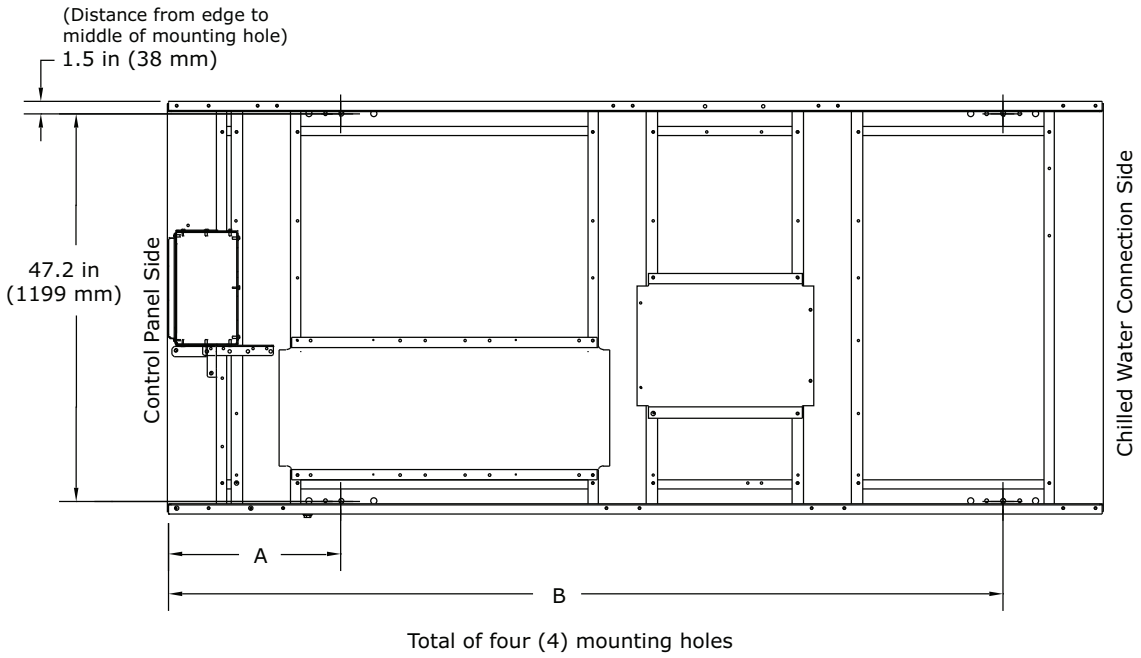

Table 23. Mounting locations, 20 to 35 ton units without wind load option

	A		B	
Unit Size (tons)	**in**	**mm**	**in**	**mm**
20, 26	21.0	533	101.2	2570
30, 35	21.9	556	132.2	3358

Figure 17. Mounting locations, 40 and 52 ton

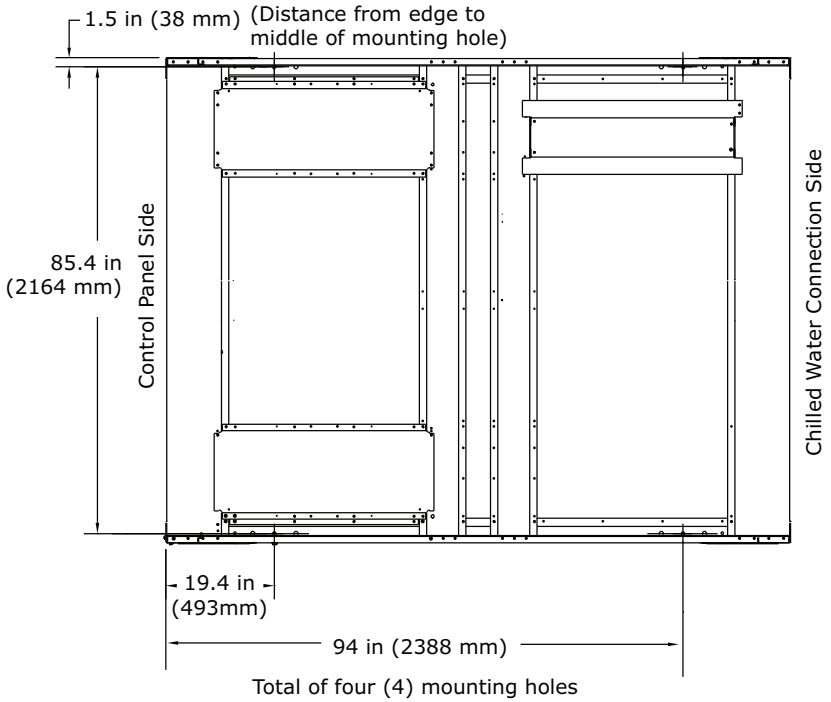

Figure 18. Mounting locations, 60 and 70 ton

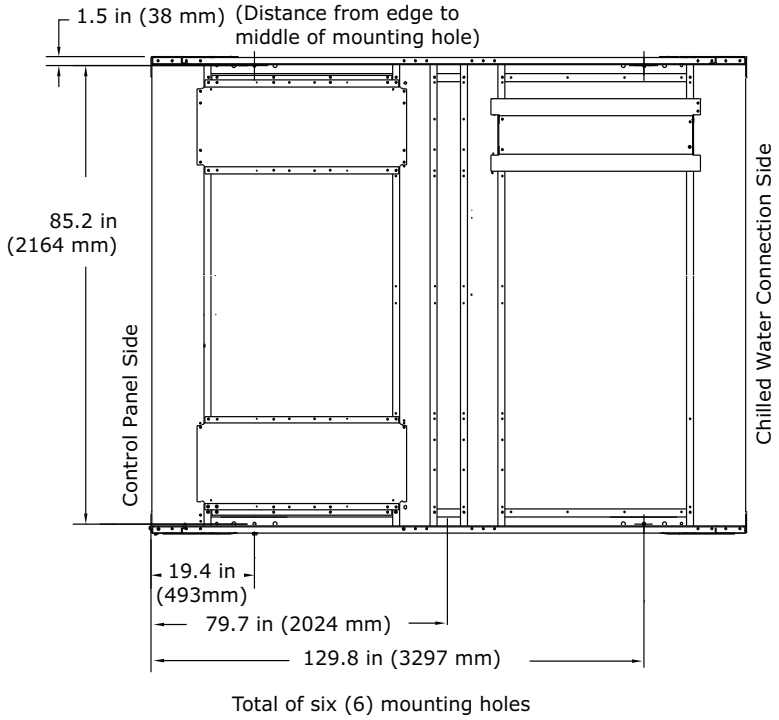

Figure 19. Mounting locations, 80 to 120 ton

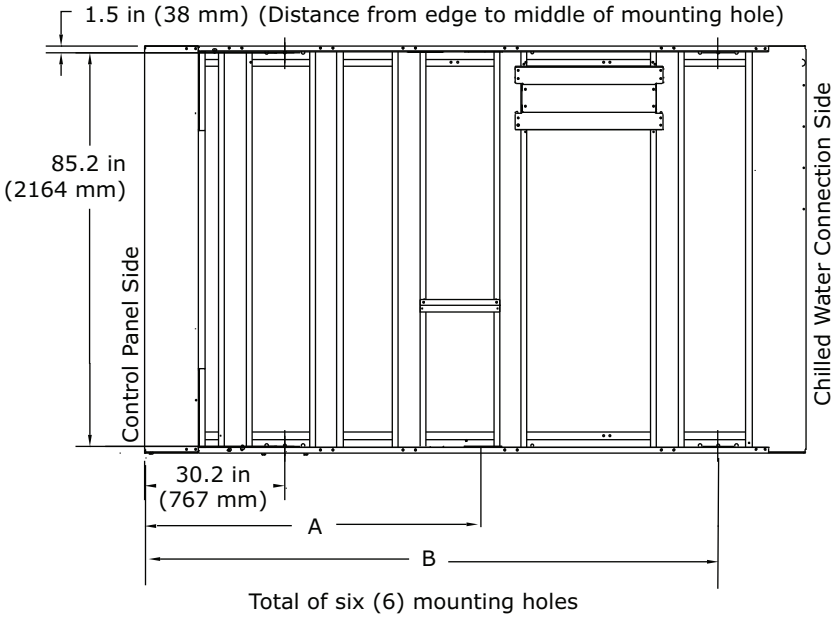

Table 24. Mounting locations, 80 to 120 ton units without wind load option

	A		B	
Unit Size (tons)	**in**	**mm**	**in**	**mm**
80, 90	83.7	2126	123.9	3147
100, 110, 120	89.2	2266	146.9	3731

Figure 20. Mounting locations, 130 ton

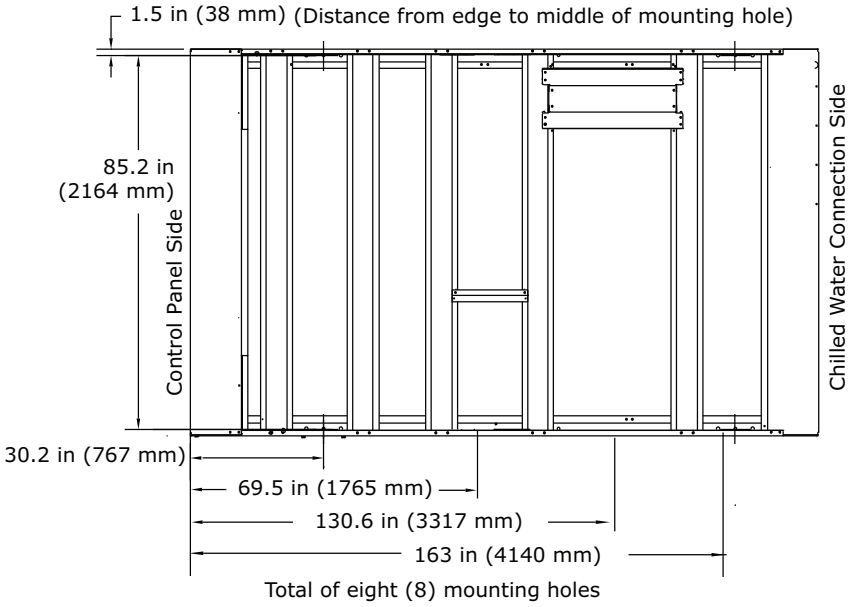

Units with Wind Load Rating

For units with wind load rating (model number digit 17 = D), additional mounting points are required as shown below. All mounting points in previous section remain the same.

Figure 21. Additional mounting locations for 40 and 52 ton units with wind load option

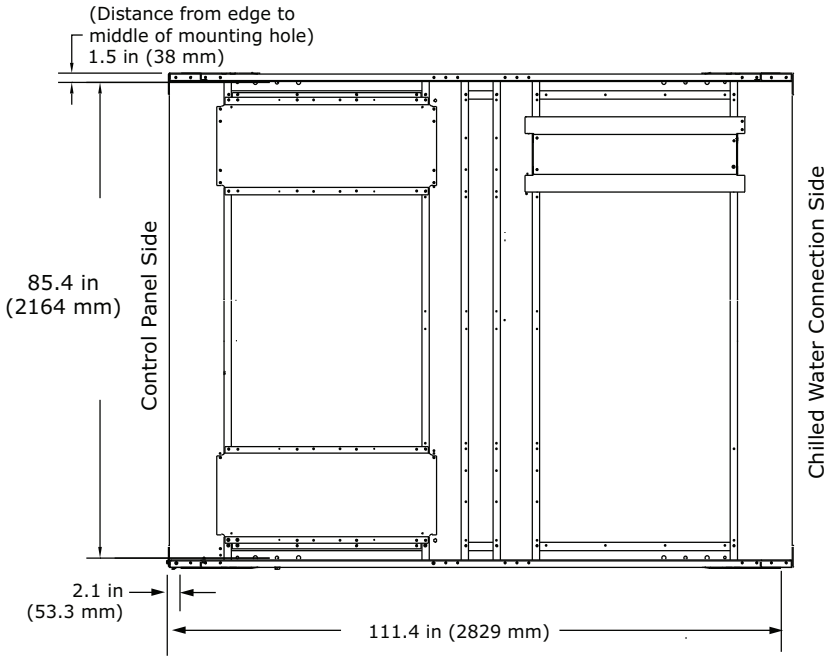

Total of four (4) additional mounting holes for wind load option
Hole diameter 0.75 in (19mm)

Figure 22. Additional mounting locations for 60 and 70 ton units with wind load option

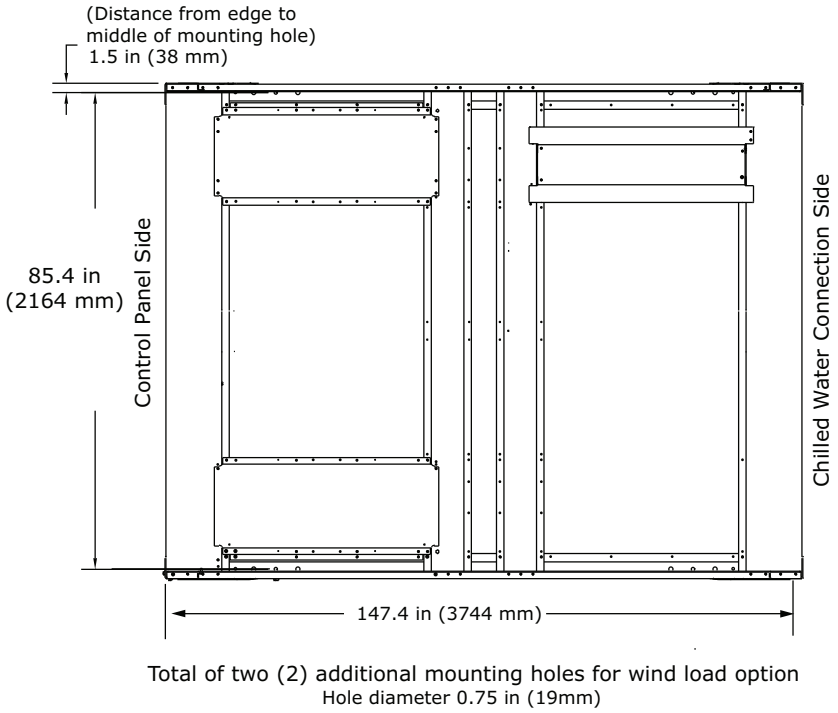

Figure 23. Additional mounting locations for 80 to 130 ton units with wind load option

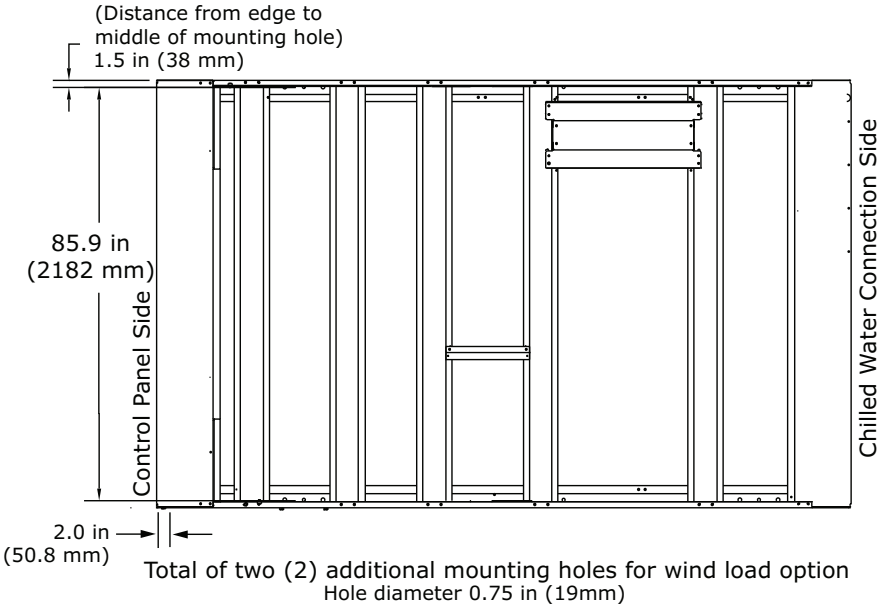

Weights

Base Units

Round Tube and Plate Fin Condenser Coils

Notes:

- *Base unit weights include aluminum fins, refrigerant charge, elastomeric isolators, circuit breakers and louvers.*
- *For units with microchannel condenser coils, see* *"Microchannel Condenser Coils," p. 56*.
- *These weights do NOT include the following options: partial heat recovery, copper fins or seismic isolators. See* *"Option Weights," p. 58* *for additional weight added by these option selections.*

Table 25. Base unit weights, 60 Hz, round tube and plate fin condenser — I-P (lb)

Unit Size (Tons)	Base Unit		Base Unit With Pump Package		Base Unit With Pump Package and Buffer Tank	
	Shipping	Operating	Shipping	Operating	Shipping	Operating
High Efficiency						
20	2185	2208	2726	2814	3252	4491
26	2249	2278	2790	2891	3317	4562
30	2846	2880	3388	3497	3915	5163
35	2878	2920	3420	3546	3947	5204
40	3666	3697	4285	4383	4876	6116
52	3761	3806	4379	4506	4971	6225
60	4978	5033	5814	5986	6406	7695
70	5045	5121	5881	6094	6473	7782
80	5607	5692	6486	6790	7077	8561
90	5859	5961	6738	7075	7329	8830
100	6646	6759	7549	7909	8265	10136
110	6724	6846	7627	8005	8343	10223
120	6762	6884	8018	8396	8733	10614
130	7753	7900	9006	9430	9722	11623
Extra Efficiency						
20	2258	2281	2798	2887	3325	4564
26	2322	2351	2863	2964	3389	4634
30	2945	2979	3487	3596	4014	5262
35	3023	3065	3565	3691	4092	5349
40	3812	3843	4431	4529	5022	6262
52	3959	4004	4578	4705	5169	6423
60	5177	5232	6013	6184	6604	7893
70	5118	5194	5954	6166	6545	7855
110	6724	6846	7627	8005	8343	10223
120	6762	6884	8018	8396	8733	10614

Note: All weights ±3%.

Table 26. Base unit weights, 60 Hz, round tube and plate fin condenser — SI (kg)

Unit Size (Tons)	Base Unit		Base Unit With Pump Package		Base Unit With Pump Package and Buffer Tank	
	Shipping	Operating	Shipping	Operating	Shipping	Operating
High Efficiency						
20	991	1002	1236	1277	1475	2037
26	1020	1034	1265	1311	1504	2069
30	1291	1306	1537	1586	1776	2342
35	1305	1325	1551	1608	1790	2360
40	1663	1677	1944	1988	2212	2774
52	1706	1726	1987	2044	2255	2824
60	2258	2283	2637	2715	2906	3490
70	2289	2323	2668	2764	2936	3530
80	2543	2582	2942	3080	3210	3883
90	2658	2704	3056	3209	3324	4005
100	3015	3066	3424	3587	3749	4598
110	3050	3105	3460	3631	3784	4637
120	3067	3122	3637	3808	3961	4814
130	3517	3583	4085	4277	4410	5272
Extra Efficiency						
20	1024	1035	1269	1310	1508	2070
26	1053	1066	1298	1344	1537	2102
30	1336	1351	1582	1631	1821	2387
35	1371	1390	1617	1674	1856	2426
40	1729	1743	2010	2054	2278	2840
52	1796	1816	2077	2134	2345	2914
60	2348	2373	2727	2805	2996	3580
70	2322	2356	2701	2797	2969	3563
110	3050	3105	3460	3631	3784	4637
120	3067	3122	3637	3808	3961	4814

Note: All weights ±3%.

Table 27. Base unit weights, 50 Hz, round tube and plate fin condenser

Unit Size (Tons)	I-P Units (lb)		SI Units (kg)	
	Shipping	Operating	Shipping	Operating
High Efficiency				
20	2187	2210	992	1002
26	2249	2278	1020	1034
30	2846	2880	1291	1306
35	2878	2920	1305	1325
40	3666	3697	1663	1677
52	3761	3806	1706	1726
60	4978	5033	2258	2283
70	5045	5121	2289	2323
80	5607	5692	2543	2582
90	5858	5960	2657	2703
100	6630	6743	3007	3059
110	6713	6835	3045	3100
120	6758	6880	3065	3121
Extra Efficiency				
20	2260	2283	1025	1035
26	2322	2351	1053	1066
30	2945	2979	1336	1351
35	3023	3065	1371	1390
40	3812	3843	1729	1743
52	3959	4004	1796	1816
60	5177	5232	2348	2373
70	5118	5194	2322	2356
110	6713	6835	3045	3100
120	6758	6880	3065	3121

Note: All weights ±3%.

Microchannel Condenser Coils

Notes:

- *Base unit weights include refrigerant charge, isolators, circuit breakers and louvers.*
- *For units with round tube and plate fin condensers, see* *"Round Tube and Plate Fin Condenser Coils," p. 53.*

Table 28. Base unit weights, 60 Hz, microchannel condenser — I-P (lb)

Unit Size (Tons)	Base Unit		Base Unit With Pump Package		Base Unit With Pump Package and Buffer Tank	
	Shipping	Operating	Shipping	Operating	Shipping	Operating
High Efficiency						
20	1967	1975	2507	2582	3034	4259
26	2030	2046	2571	2659	3098	4329
30	2388	2403	2929	3021	3456	4686
35	2608	2630	3150	3256	3677	4914
40	3307	3314	3926	3999	4517	5732
52	3402	3422	4021	4122	4612	5840
60	4136	4156	4972	5108	5563	6817
70	4579	4616	5415	5589	6006	7278
80	4888	4899	5766	5996	6357	7768
90	5141	5163	6020	6277	6611	8032
100	5816	5838	6719	6988	7434	9215
110	5893	5924	6796	7083	7511	9301
120	5930	5966	7186	7477	7902	9696
130	6722	6757	7976	8287	8691	10480

Note: All weights ±3%.

Table 29. Base unit weights, 60 Hz, microchannel condenser — SI (kg)

Unit Size (Tons)	Base Unit		Base Unit With Pump Package		Base Unit With Pump Package and Buffer Tank	
	Shipping	Operating	Shipping	Operating	Shipping	Operating
High Efficiency						
20	892	896	1137	1171	1376	1932
26	921	928	1166	1206	1405	1964
30	1083	1090	1329	1370	1568	2126
35	1183	1193	1429	1477	1668	2229
40	1500	1503	1781	1814	2049	2600
52	1543	1552	1824	1870	2092	2649
60	1876	1885	2255	2317	2523	3092
70	2077	2094	2456	2535	2724	3301
80	2217	2222	2616	2720	2884	3523
90	2332	2342	2731	2847	2999	3643
100	2638	2648	3048	3170	3372	4180
110	2673	2687	3083	3213	3407	4219
120	2690	2706	3260	3392	3584	4398
130	3049	3065	3618	3759	3942	4754

Note: All weights ±3%.

Table 30. Base unit weights, 50 Hz, microchannel condenser

Unit Size (Tons)	I-P (lb)		SI (kg)	
	Shipping	Operating	Shipping	Operating
		High Efficiency		
20	1967	1978	892	897
26	2030	2046	921	928
30	2388	2403	1083	1090
35	2608	2630	1183	1193
40	3307	3314	1500	1503
52	3402	3422	1543	1552
60	4136	4156	1876	1885
70	4579	4616	2077	2094
80	4888	4899	2217	2222
90	5139	5163	2331	2342
100	5798	5822	2630	2641
110	5882	5913	2668	2682
120	5926	5961	2688	2704

Note: All weights ±3%.

Option Weights

Note: *Weights listed below are in addition to base unit weights found in previous section. For total unit weight, add option weights to base unit weight found in* *"Round Tube and Plate Fin Condenser Coils," p. 53*.

Table 31. Option weights, 60 Hz, round tube and plate fin condenser

Unit Size (tons)	I-P Units (lb)				SI Units (kg)			
	Partial Heat Recovery		Copper Fins	Seismic Isolator	Partial Heat Recovery		Copper Fins	Seismic Isolator
	Shipping	Operating			Shipping	Operating		
High Efficiency								
20	39	63	258	160	18	28	117	73
26	39	70	258	160	18	32	117	73
30	47	82	359	160	21	37	163	73
35	47	91	359	160	21	41	163	73
40	94	128	516	160	43	58	234	73
52	94	143	516	160	43	65	234	73
60	111	170	719	240	50	77	326	109
70	111	191	719	240	50	87	326	109
80	170	260	1270	240	77	118	576	109
90	170	279	1270	240	77	126	576	109
100	178	298	1512	240	81	135	686	109
110	178	307	1512	240	81	139	686	109
120	178	310	1512	240	81	140	686	109
130	178	335	1889	320	81	152	857	145
Extra Efficiency								
20	39	63	258	-	18	28	117	-
26	39	70	258	-	18	32	117	-
30	47	82	360	-	21	37	163	-
35	47	91	360	-	21	41	163	-
40	94	128	516	-	43	58	234	-
52	94	143	516	-	43	65	234	-
60	111	170	720	-	50	77	326	-
70	111	191	720	-	50	87	326	-
110	178	307	1512	-	81	139	686	-
120	178	310	1512	-	81	140	686	-

Note: All weights ±3%.

Table 32. Option weights, 50 Hz, round tube and plate fin condenser

Unit Size (tons)	I-P Units (lb)				SI Units (kg)			
	Partial Heat Recovery		Copper Fins	Seismic Isolator	Partial Heat Recovery		Copper Fins	Seismic Isolator
	Shipping	Operating			Shipping	Operating		
High Efficiency								
20	40	24	258	160	18	11	117	73
26	40	31	258	160	18	14	117	73
30	46	35	359	160	21	16	163	73
35	46	44	359	160	21	20	163	73
40	95	33	516	160	43	15	234	73
52	95	49	516	160	43	20	234	73
60	110	60	719	240	50	27	326	109
70	110	79	719	240	50	36	326	109
80	170	90	1270	240	77	41	576	109
90	170	108	1270	240	77	49	576	109
100	179	119	1512	240	81	54	686	109
110	179	130	1512	240	81	59	686	109
120	179	130	1512	240	81	59	686	109
Extra Efficiency								
20	40	24	258	-	18	11	117	-
26	40	31	258	-	18	14	117	-
30	46	35	359	-	21	16	163	-
35	46	44	359	-	21	20	163	-
40	95	33	516	-	43	15	234	-
52	95	49	516	-	43	22	234	-
60	110	60	719	-	50	27	326	-
70	110	79	719	-	50	36	326	-
110	179	130	1512	-	81	59	686	-
120	179	130	1512	-	81	59	686	-

Note: All weights ±3%.

Mechanical Specifications

General

Units are constructed of galvanized steel frame with galvanized steel panels and access doors. Component surfaces are finished with a powder-coated paint. Each unit ships with full operating charges of refrigerant and oil.

Certified AHRI Performance

Trane air-cooled chillers are rated within the scope of the Air-Conditioning, Heating & Refrigeration Institute (AHRI) Certification Program and display the AHRI Certified® mark as a visual confirmation of conformance to the certification sections of AHRI Standard 550/590 (I-P) and ANSI/AHRI Standard 551/591 (SI). The applications in this catalog specifically excluded from the AHRI certification program are:

- Custom Units
- Units produced outside of the USA for installations outside the USA
- Evaporatively-cooled chillers
- Units with evaporators that use fluid other than fresh water except units containing freeze protection fluids in the condenser or in the evaporator with a leaving chilled fluid temperature above 32°F [0°C] are certified when rated per the Standard with water.

Compressor and Motor

The unit is equipped with two or more hermetic, direct-drive, 3600 rpm 60 Hz (3000 rpm 50 Hz) suction gas-cooled scroll compressors. The simple design has only three major moving parts and a completely enclosed compression chamber which leads to increased efficiency. Overload protection is included. The compressor includes: centrifugal oil pump, oil level sight glass and oil charging valve. Each compressor will have compressor heaters installed and properly sized to minimize the amount of liquid refrigerant present in the oil sump during off cycles.

Unit-Mounted Starter

The control panel is designed per UL 1995. The starter is an across-the-line configuration, factory-mounted and fully pre-wired to the compressor motor and control panel. A factory-installed, factory-wired 820 VA control power transformer provides all unit control power (120 Vac secondary) and Trane CH530 module power (24 Vac secondary). Power line connection type is standard with a terminal block.

Evaporator

Braze plate heat exchanger is made of stainless steel with copper as the braze material. It is designed to withstand a refrigerant side working pressure of 430 psig (29.6 bars) and a waterside working pressure of 150 psig (10.5 bars). Evaporator is tested at 1.1 times maximum allowable refrigerant side working pressure and 1.5 times maximum allowable water side working pressure. It has one water pass. Immersion heaters protect the evaporator to an ambient of -20°F (-29°C).

The evaporator is covered with factory-installed 0.75 inch (19.05 mm) Armaflex II or equal (k=0.28) insulation. Foam insulation is used on the suction line. Water pipe extensions with insulation go from the evaporator to the edge of the unit.

Condenser

Air-cooled microchannel condenser coils use all aluminum brazed fin construction. Each slab is split horizontally into separate condensing and subcooling coils that are connected by either a

copper tube or receiver tank. The maximum allowable working pressure of the condenser is 650 psig (44.8 bars). Condensers are factory proof and leak tested at 715 psig (49.3 bars). Coils can be cleaned with high pressure water.

Optional round tube and plate fin air-cooled condenser coils have aluminum fins mechanically bonded to internally-finned copper tubing. The condenser coil has an integral subcooling circuit. The maximum allowable working pressure of the condenser is 650 psig (44.8 bars). Condensers are factory proof and leak tested at 715 psig (49.3 bars).

Direct-drive vertical discharge condenser fans are balanced. Three-phase condenser fan motors with permanently lubricated ball bearings and external thermal overload protection are provided.

Units start and operate from 0°F to 125°F (-18°C to 52°C) for wide ambient. Wide ambient allows operation down to 0°F which is accomplished by a variable speed fan on each circuit that modulates to maintain system differential pressure.

Refrigerant Circuit and Capacity Modulation

The 20-35 ton units have single refrigerant circuits. The 40-130 ton units have dual refrigerant circuits. Each refrigerant circuit has Trane scroll compressors piped in parallel with a passive oil management system. A passive oil management system maintains proper oil levels within compressors and has no moving parts. Each refrigerant circuit includes filter drier, electronic expansion valve, and liquid line and discharge service valves.

Capacity modulation is achieved by turning compressors on and off. The 20-35 ton units have two capacity stages. The 40-120 ton units have four capacity stages. The 130 ton unit has six capacity stages.

Unit Controls (Trane CH530)

The microprocessor-based control panel is factory-installed and factory-tested. The control system is powered by a pre-wired control power transformer, and will turn on and off compressors to meet the load. Microprocessor-based chilled water reset based on return water is standard.

The Trane CH530 microprocessor automatically acts to prevent unit shutdown due to abnormal operating conditions associated with low evaporator refrigerant temperature and high condensing temperature. If an abnormal operating condition continues and the protective limit is reached, the machine will shut down.

The panel includes machine protection for the following conditions:

- Low evaporator refrigerant temperature and pressure
- High condenser refrigerant pressure
- Critical sensor or detection circuit faults
- High compressor discharge temperature (with low temp evaporator)
- Lost communication between modules
- Electrical distribution faults: phase loss, phase reversal or over temperature protection
- External and local emergency stop
- Loss of evaporator water flow

When a fault is detected, the control system conducts more than 100 diagnostic checks and displays results. The display will identify the fault, indicate date, time, and operating mode at time of occurrence, and provide type of reset required and a help message.

Clear Language Display Panel

Factory-mounted to the control panel door, the operator interface has an LCD touch-screen display for operator input and information output. This interface provides access to the following information: evaporator report, condenser report, compressor report, ASHRAE Guideline 3 report, operator settings, service settings, service tests, and diagnostics. All diagnostics and messages are displayed in "clear language."

Data contained in available reports includes:

- Water and air temperatures
- Refrigerant pressures and temperatures
- Flow switch status
- EXV position
- Compressor starts and run-time

All necessary settings and setpoints are programmed into the microprocessor-based controller via the operator interface. The controller is capable of receiving signals simultaneously from a variety of control sources, in any combination, and priority order of control sources can be programmed. The control source with priority determines active setpoints via the signal it sends to the control panel. Control sources may be:

- Local operator interface (standard)
- Hard-wired 4-20 mA or 2-10 Vdc signal from an external source (interface optional; control source not supplied)
- Time of day scheduling (optional capability available from local operator interface)
- LonTalk® LCI-C (interface optional; control source not supplied)
- BACNet® (interface optional; control source not supplied)
- Trane Tracer® Summit system (interface optional; control source not supplied)

Quality Assurance

The quality management system applied by Trane has been subject to independent third-party assessment and approval to ISO 9001-2008. The products described in this catalog are designed, manufactured and tested in accordance with the approved system requirements described in the Trane Quality Manual.

Options

Application Options

Ice-Making with Hardwired Interface

Unit controls are factory set to handle ice-making for thermal storage application. An additional temperature sensor, at the compressor discharge, enables full load operation of the chiller with entering evaporator fluid temperature between 20°F (-7°C) and 65°F (18°C) with glycol.

High Ambient

The unit starts and operates from 32°F to 125°F (0°C to 52°C).

Low-Temperature Processing

An additional temperature sensor, at the compressor discharge, enables leaving evaporator fluid temperature between 10°F (-12.2°C) and 42°F (5.5°C) with glycol.

Leaving evaporator fluid temperatures below 10°F (-12.2°C) are also possible for specific applications.

Partial Heat Recovery with Fan Control

A supplemental brazed plate heat exchanger is mounted in series to the condenser coil. Connecting piping and inlet and outlet water sensors are included. CH530 controls display heat recovery inlet and outlet water temperatures and controls the fans. The heat rejection to the partial heat recovery heat exchanger is not controlled. Flow and temperature variations through the partial heat recovery heat exchanger will vary. The partial heat recovery heat exchanger is typically used to preheat water before it enters a boiler or other water heating process.

Dual High Head Pump Package

Pump package includes: two high head pumps, VFD, expansion vessels, drainage valves, shut-off valves at entering and leaving connections.

The pump package is single point power integrated into the chiller unit power with a separate factory wired control panel. The control of the pump is integrated into the chiller controller. The CH530 displays evaporator pump starts and run-times. Freeze protection down to an ambient of -20°F (-29°C) is included as standard. The cold parts of the pump package will also be insulated.

Designed with one redundant pump, the chiller controls both pumps through a lead/lag and failure/recovery functionality.

A variable speed drive is installed in an additional panel to control the pump. The inverter is adjusted upon start up to balance the system flow and head requirements. The purpose is to save on wasted pump energy caused by a traditional balancing valve.

Buffer Tank (only available with pump package)

The water tank is factory-installed for easy installation at the building site. The tank is engineered for continuous flow and is fully insulated as standard and is designed with freeze protection down to -20°F (-29°C). The purpose of the tank is to increase the chilled water circuit inertia, which is necessary with short water loops. A high circuit inertia reduces the compressor's cycling to increase the compressor life span and allow for more precise water temperature accuracy. It also saves energy as compared to hot gas bypass.

Electrical Options

Circuit Breaker

A molded case standard interrupting capacity circuit breaker, factory pre-wired with terminal block power connections and equipped with a lockable external operator handle, is available to disconnect the chiller from main power.

Circuit Breaker with High Fault Rated Control Panel

A molded case high interrupting capacity circuit breaker, factory pre-wired with terminal block power connections and equipped with a lockable external operator handle, is available to disconnect the chiller from main power.

Short Circuit Rating

Short circuit rating of 5 kA or up to 65 kA is available.

Control Options

BACNet Interface

Allows user to easily interface with BACNet® via a single twisted-pair wiring to a factory-installed and tested communication board.

LonTalk/Tracer Summit Interface

LonTalk® (LCI-C) or Tracer® Summit communications capabilities are available with communication link via single twisted-pair wiring to factory-installed and tested communication board. This option will support the functionality required to obtain LonMark® certification.

Time of Day Scheduling

Time of day scheduling capabilities are available for scheduling single chiller applications through Trane CH530 panel (without the need for building automation system - BAS). This feature allows the user to set up to ten events in a seven day time period.

External Chilled Water and Demand Limit Setpoint

Controls, sensors, and safeties allow reset of chilled water temperature, based on temperature signal, during periods of low outdoor air temperature (chilled water reset based on return chilled water temperature is standard). The demand limit setpoint is communicated to a factory-installed and tested communication board through a 2-10 Vdc or 4-20 mA signal.

Percent Capacity

Output the number of compressors that are operating as an analog 2-10 Vdc or 4-20 mA signal.

Programmable Relays

Predefined, factory-installed, programmable relays allow the operation to select four relay outputs. Available outputs are: Alarm-Latching, Alarm-Auto Reset, General Alarm, Warning, Chiller Limit Mode, Compressor Running, and Tracer Control.

Other Options

Architectural Louvered Panels

Louvered panels cover the complete condensing coil and service area beneath the condenser.

Half Louvers

Louvered panels cover the condenser coil only. Available on the 80-130 ton units only.

Comprehensive Acoustic Package

This option includes acoustical treatment for compressor.

Condenser Coil - CompleteCoat

Condenser coils are made of aluminum fins (plate fins) mechanically bonded to internally finned copper tubes. The condenser box is then submerged in an epoxy polymer bath where an electrostatic charge is used to uniformly deposit the epoxy onto the coil. This option resists bi-metallic corrosion and allows for operation in coastal environments.

Condenser Coil - Copper

Condenser coils are made of non-slit copper fins (plate fins) mechanically bonded to internally finned copper tubes. Copper fins and copper tubes reduce material deterioration due to galvanic corrosion.

Condenser Coil - Microchannel

Microchannel condensing coils are all-aluminum coils with fully-brazed construction. This design reduces risk of leaks and provides increased coil rigidity — making them more rugged on the jobsite.

Microchannel all-aluminum construction provides several additional benefits:

- Light weight (simplifies coil handling)
- Easy to recycle
- Minimize galvanic corrosion

Their flat streamlined tubes with small ports and metallurgical tube-to-fin bond allow for exceptional heat transfer.

Bottom line, less refrigerant is being used, which creates a healthier and greener environment.

Isolators

Molded elastomeric isolators sized to reduce vibration transmission to the supporting structure when the unit is installed. Isolators ship with the chiller.

Isolators - Seismically Rated

Spring isolators are designed and tested to control the motion of the chiller during a seismic event.

Insulation for High Humidity

The evaporator is covered with factory-installed 1.25 inch (31.8 mm) Armaflex II or equal (k=0.28) insulation. Foam insulation is used on the suction line.

Nitrogen Charge

Unit is shipped with oil and a nitrogen charge in lieu of refrigerant.

Performance Test

Performance tests are available to certify chiller performance before shipment.

Rapid Restart Test

After completion of a standard full load witness test, power to the chiller will be cut and then reapplied to demonstrate the chiller's rapid restart capabilities for disaster relief.

Seismically Rated Unit — IBC

Unit is built and certified for seismic applications in accordance with the following International Building Code (IBC) releases 2000, 2003, 2006 and 2009.

Seismically Rated Unit — OSHPD

Unit is built and certified for seismic applications in accordance with California Office of Statewide Health Planning and Development (OSHPD).

Wind Load for Florida Hurricane

Unit is built and certified to meet the requirements of the 2014 Florida Building Code and ASCE 7-10 for 186 mph wind speed, Exposure 'C', Risk Category III. Available for non-rooftop mounted units only.

Ingersoll Rand (NYSE:IR) advances the quality of life by creating comfortable, sustainable and efficient environments. Our people and our family of brands—including Club Car®, Ingersoll Rand®, Thermo King® and Trane®—work together to enhance the quality and comfort of air in homes and buildings; transport and protect food and perishables; and increase industrial productivity and efficiency. We are a global business committed to a world of sustainable progress and enduring results.

ingersollrand.com

Globally Recognized. Industry Respected.

The AHRI Certified mark indicates Ingersoll Rand's participation in the AHRI Certification program. For verification of individual certified products, go to www.ahridirectory.org.

Ingersoll Rand has a policy of continuous product and product data improvement and reserves the right to change design and specifications without notice.
We are committed to using environmentally conscious print practices.

CG-PRC017M-EN 21 Feb 2017
Supersedes CG-PRC017L-EN (10 Jan 2017)

©2017 Ingersoll Rand